1. 5:30 P.M. Committee Of Ways & Means

   Documents:

   20 MAR 17 WM AGENDA.PDF

2. 5:30 P.M. Committee Of Ways & Means

   Documents:

   2020 MARCH 17 WM MTG.PDF

Braintree Town Council

Committee of Ways & Means

One JFK Memorial Drive
Braintree, Massachusetts 02184

MEMBERS
Meredith Boericke, Chairwoman
Charles Ryan, Vice-Chairman
Donna Connors, Member
Julia Flaherty, Member
Steven Sciascia, Member

AGENDA

Tuesday, March 17, 2020

Starting Time – 5:30p.m.

Johnson Chambers, Town Hall

1. Pledge of Allegiance/Moment of Silence

2. Roll Call

3. Approval of Minutes
   - None

4. Old Business
   - 19 044 Mayor: To Approve the purchase and resale of an affordable-housing unit at Turtle Crossing and the expenditure of funds for that purpose or take up any action relative thereto (Tabled 2/25/20)

5. New Business
   - 20 032 Mayor: FY2020 Supplemental Appropriation #2 (Master Plan) or take up any action relative thereto (PUBLIC HEARING at Full Council to be TABLED)
   - 20 033 Mayor FY2020 Supplemental Appropriation #3 (PFAS Removal-Water Treatment Plant) up any action relative thereto (PUBLIC HEARING at Full Council)
   - 20 035 Mayor: Motion to Accept Massachusetts General Law c. 59 s. 5C ½ (additional real estate exemption) or take up any action relative thereto
   - 20 037 Superintendent of Schools: Statement of Interest (SOI) with the MSBA for Braintree High School or take up any action relative thereto

Adjournment

As we are all aware, Governor Charles Baker has declared a state of emergency in Massachusetts to support the state's response to COVID-19 (Coronanvirus). People should use their own judgment if they wish to attend meetings and events where there will be crowds. If you are ill or symptomatic, you should not attend. At the present time, Town meetings will continue to be held and open to the public as required by law and the Town can make no assurance of safety or assistance in prevent the transmission of illness. The Town continues to monitor the situation through the Health Department and specific questions should be directed to Jean McGinty, Public Health Nurse at 781-794-8094 or Marybeth McGrath, Director of Health, at 781-794-8095.

Braintree Town Council

Committee of Ways & Means

One JFK Memorial Drive
Braintree, Massachusetts 02184

MEMBERS
Meredith Boericke, Chairwoman
Charles Ryan, Vice-Chairman
Donna Connors, Member
Julia Flaherty, Member
Steven Sciascia, Member

AGENDA

Tuesday, March 17, 2020

Starting Time – 5:30p.m.

Johnson Chambers, Town Hall

1. Pledge of Allegiance/Moment of Silence

2. Roll Call

3. Approval of Minutes
   - None

4. Old Business
   - 19 044 Mayor: To Approve the purchase and resale of an affordable-housing unit at Turtle Crossing and the expenditure of funds for that purpose or take up any action relative thereto (Tabled 2/25/20)

5. New Business
   - 20 032 Mayor: FY2020 Supplemental Appropriation #2 (Master Plan) or take up any action relative thereto (PUBLIC HEARING at Full Council to be TABLED)
   - 20 033 Mayor FY2020 Supplemental Appropriation #3 (PFAS Removal-Water Treatment Plant) up any action relative thereto (PUBLIC HEARING at Full Council)
   - 20 035 Mayor: Motion to Accept Massachusetts General Law c. 59 s. 5C ½ (additional real estate exemption) or take up any action relative thereto
   - 20 037 Superintendent of Schools: Statement of Interest (SOI) with the MSBA for Braintree High School or take up any action relative thereto

Adjournment

As we are all aware, Governor Charles Baker has declared a state of emergency in Massachusetts to support the state's response to COVID-19 (Coronanvirus). People should use their own judgment if they wish to attend meetings and events where there will be crowds. If you are ill or symptomatic, you should not attend. At the present time, Town meetings will continue to be held and open to the public as required by law and the Town can make no assurance of safety or assistance in prevent the transmission of illness. The Town continues to monitor the situation through the Health Department and specific questions should be directed to Jean McGinty, Public Health Nurse at 781-794-8094 or Marybeth McGrath, Director of Health, at 781-794-8095.

#20-032

Office of the Mayor

One JFK Memorial Drive
Braintree, Massachusetts 02184

Charles C. Kokoros
Mayor

781-794-8100

RECEIVED TOWN CLERK
BRAINTREE, MA
2020 FEB 20 PM 1:19

To: Shannon L. Hume, President of the Council
Susan Cimino, Clerk of the Council
James Casey, Town Clerk

From: Charles C. Kokoros, Mayor CCK

Cc: Nicole I. Taub, Acting Chief of Staff and Director of Operations
Edward Spellman, Director of Municipal Finance
Christine Stickney, Planning and Development Director

Date: February 18, 2020

Re: FY 2020 Supplemental Appropriation

As I previously stated, a priority of my administration is to move forward with an updated master plan for the Town of Braintree. To move this promise forward I am presenting for your approval the funding required for this project in the amount of $200,000.00.

To fund this request I propose transferring the unexpended sum of $64,492.20 from the article balance CO 14 021(1) Updating Zoning Ordinance and the balance of $135,507.80 is to come from a transfer from FY 2019 Certified Free Cash.

Accordingly, your review and approval of the following motion is requested:

Motion: That the amount of $64,492.20 be transferred from the Planning and Community Development Department Updating Zoning Ordinance article and $135,507.80 be transferred from FY 2019 Certified Free Cash for a total of $200,000.00 to Planning and Community Development Department Master Plan article.

Since these requests involve the appropriation of funds within the fiscal year 2020 budget, advertising and a public hearing is required under the sections 2-9 and 6-7 of the Town Charter.

#20-033

Office of the Mayor

One JFK Memorial Drive
Braintree, Massachusetts 02184

Charles C. Kokoros
Mayor

781-794-8100

RECEIVED TOWN CLERK
BRAINTREE, MA
2020 MAR 10 PM 4:47

To: Shannon L. Hume, President of the Council
Susan Cimino, Clerk of the Council
James Casey, Town Clerk

From: Charles C. Kokoros, Mayor CCK

Cc: Nicole I. Taub, Acting Chief of Staff and Director of Operations
Edward Spellman, Director of Municipal Finance
James Arsenault, Public Works Director
Lou Dutton, Water Sewer Superintendent

Date: March 10, 2020

Re: FY 2020 Supplemental Appropriation #3 PFAS Removal - Water Treatment Plant

---

The Tri Town Board has been meeting over the last year on the new regional water treatment plant and design options. The Tri-Town Board recently conducted voluntary testing for the emerging contaminant known as Per- and polyflouroalky substances (PFAS) as part of the design of the new Tri-Town Regional Water Treatment Plant. PFAS has been detected at low levels in the water supply for Braintree, Randolph and Holbrook averaging 24.5 parts per trillion. In November the board met with representatives from the Massachusetts Department of Environmental Protection to discuss this and regulations proposed at the time to reduce the state limit to below 70 parts per trillion. The Tri-Town water supply is tested for PFAS on a quarterly basis and as of January 3, 2020, the PFAS levels in our public water supply have been reduced to 21 ppt.

It is our commitment to reduce the levels of PFAS to be lower than 20 parts per trillion per MassDEP recommendation in our existing treatment plant. I have been meeting with James Arsenault, Public Works Director and Lou Dutton, Water Sewer Superintendent and Environmental Partners to explore options. After reviewing the options presented by Environmental Partners for the treatment of PFAS, we have determined that the Granular Activated Carbon (GAC) would be the best suitable application. The reasoning behind the decision was that, although all options will bring us below the 20 parts per trillion recommended

by the Massachusetts Department of Environmental Protection, the GAC will be able to be in place and operational in the shortest amount of time.

To move this process forward I am presenting for your approval the funding required for this project in the amount of $693,020. To fund this request, I propose transferring the amount of $693,020 FY 2019 Water Sewer Retained Earnings. The current Water Sewer Retained Earnings balance is $5,734,872.

Accordingly, your review and approval of the following motion is requested:

Motion: That the amount of $693,020 be transferred from FY 2019 certified Water Sewer Retained Earnings to Water Department Water Treatment Plant PFAS Removal System article.

Since these requests involve the appropriation of funds within the fiscal year 2020 budget, advertising and a public hearing is required under the sections 2-9 and 6-7 of the Town Charter.

#20-033

TOWN OF BRAINTREE
DEPARTMENT OF PUBLIC WORKS
85 Quincy Avenue
Braintree, Massachusetts 02184
Tel: 781-794-8254 Fax: 781-356-6803

Charles C. Kokoros
Mayor

James Arsenault, PE
Director

To: Charles C. Kokoros, Mayor

From: James Arsenault, P.E. J.A.

Cc: Nicole I. Taub, Acting Chief of Staff and Director of Operations
Edward Spellman, Director of Municipal Finance

Date: February 26, 2020

Re: FY 2020 Supplemental Appropriation Water Treatment Plant

After reviewing the attached report dated February 19, 2020, presented by Helen Gordon of Environmental Partners Group regarding the treatment of PFAS, we have determined that the Granular activated Carbon (GAC) would be the best suitable water treatment application to meet current state recommendations.

The reasoning behind the decision was that although all options noted will bring us below the 20 parts per trillion recommended by the Massachusetts Department of Environmental Protection, the GAC treatment application has the lowest starting price, good performance and will be able to be in place and operational in the shortest amount of time, most likely 2-3 weeks. The maintenance cost however is higher than other treatment applications due to the fact that the media will have to be replaced periodically which drives the overall price up. Although the slurry eductor powder activated carbon (PAC) has the lowest overall treatment application cost over the proposed four year period until the new treatment plant is built, the equipment needed to add the chemical will have to be ordered, shipped to site, engineered, piped, and installed. This will take a number of months to put into place. Also, the performance is noted as the lowest of the options and with the addition of the PAC there are drinking water residuals. The disposal of these residuals could very well drive the price of this treatment application above the GAC option. We feel confident that the GAC will give us the best performance and will be the most cost efficient for the Town.

#20-033

ENVIRONMENTAL PARTNERS

MEMORANDUM

Date: February 19, 2020

To Lou Dutton, Superintendent, Braintree Water & Sewer

From Helen Gordon, PE, BCEE, Adam Kran, PE and Alysa Longo – Environmental Partners

CC James Arsenault, PE, Director, Braintree DPW

Subject Braintree WTP – PFAS Removal System – Alternatives Analysis

Background

Per our memo to the Mayor of Braintree, dated January 30, 2020, Environmental Partners has completed an assessment of several alternative systems for PFAS removal at the Braintree Water Treatment Plant (WTP). The following options were evaluated on the basis of installation cost, effectiveness at removing PFAS, and operations and maintenance costs over a period of four years until the Tri-Town Regional Water Treatment Plan (TTRWTP) is commissioned:

- Silo and slurry eductor powder activated carbon system;
- Big bag unloader and slurry eductor powder activated carbon system;
- Retrofit existing filters with granular activated carbon media;
- Granular activated carbon vessels; and
- Ion exchange resin vessels.

In addition, EP assessed whether each alternative was available for rental or purchase, and identified availability and lead times of each system. A summary of each alternative, our analysis, and an opinion of probable cost is included here for your review. Once you've had an opportunity to review the analysis, we would like to schedule a meeting to discuss the alternatives.

Alternatives Analysis

Purchase a Silo and Slurry Eductor PAC System

EP worked with Sodimate to identify a silo and slurry eductor powder activated carbon (PAC) system to replace the WTP's hopper system, which is out of service due to the failure of its air filtration system. The bulk storage silo is a 36-foot high, steel, skirt-supported tank which could be installed north of the filter building, in between the footprint of the existing sedimentation basins, as shown in the attached Figure 1. The silo system is dust free and eliminates the need for manual addition of PAC. PAC would be delivered to Braintree WTP in bulk deliveries directly at the silo, at a lower cost per pound when compared to the individual 44-lb bag deliveries they currently receive. The slurry eductor system, installed underneath the silo within its steel skirt, creates a continuous PAC slurry which would be piped to the filter building and injected prior to the rapid mixing chamber.

A detailed opinion of probable cost for the silo and slurry eductor system is included in Attachment A, with a summary provided in the table below. All costs included in this memo are based on the Fourth Quarter 2019 Turner Building Cost Index of 1177. This alternative has one of the lowest installation costs and one of the lowest operations and maintenance (O&M) costs over a period of four years. The installation cost includes an estimate for engineering design, permitting, and construction administration work.

Table 1: Purchase of Silo & Slurry Eductor PAC System

Cost of Installation:	$521,320.00
Cost of Operation & Maintenance:	$501,300.00
Total Cost Over Four Years:	**$1,022,620.00**

It should be noted that the system requires a high dosage of PAC to consistently reduce PFAS levels to below the 20 ppt standard. Once the Town selects a PAC product, further jar testing should be conducted to confirm the optimal dose and to finalize the equipment sizing. Additionally, the use of PAC will increase the WTP's residuals production, thereby increasing their disposal costs. An estimate of the additional residuals management cost was included in the O&M cost, but further investigation is needed to better determine what volume will be produced. Any additional disposal costs would increase the operations and maintenance costs of this alternative.

The silo and eductor system will require 18 weeks for fabrication and delivery. The estimated installation time upon delivery of the equipment is two weeks. This is assuming the site modifications, including clearing, grading, and installation of the concrete pad are completed before delivery. The additional installation work required upon delivery includes: lifting the silo into position; assembling the discharge system, ladder, and guardrails; connecting the dry powder system to the slurry system, and; connecting the slurry system to the treatment plant. The slurry system is provided fully fabricated and skid-mounted, ready to be connected.

Rent a Big Bag Unloader and Slurry Eductor PAC System

If the Town is more interested in renting a PAC system for the approximately four years it will be in operation, Sodimate offers a big bag unloader in place of the silo. The unloader is designed to discharge "supersacs" of PAC, up to two tons in weight. Again, this system eliminates the need for operators to manually add PAC. Instead, the unloader automatically discharges PAC to the slurry eductor system, without compacting the product and without releasing dust. Both the unloader and eductor system would be installed north of the filter building, as shown in Figure 1, within a protective shed. The slurry is then piped to the filter building and injected prior to the rapid mixing chamber.

A detailed opinion of probable cost for renting the system is included in Attachment A, and a summary is provided in the table below. This alternative has the lowest operation and maintenance costs and one of the lowest installation costs. The installation cost includes an estimate for engineering design, permitting, and construction administration work.

Table 2: Rent Big Bag Unloader & Slurry Eductor PAC System

Cost of Installation:	$648,110.00
Cost of Operation & Maintenance:	$465,880.00
Total Cost Over Four Years:	**$1,113,990.00**

Again, further jar testing should be conducted to identify an optimal PAC dose once a PAC product has been selected by the Town. Based on previous jar testing, a high dose of PAC is expected to be needed to keep PFAS levels below the 20 ppt standard. An estimate of the additional residuals management cost was included in the O&M cost, but further investigation is needed to better determine what volume of additional residuals will be produced by the PAC. Any additional disposal costs would increase the operations and maintenance costs of this alternative. Currently, there are no units available for rental. Fabrication and delivery of a rental unloader and slurry educator system will take 10-12 weeks. Additional work required for installation of this unit includes some site clearing and grading, installation of a shed to protect the equipment from weather exposure, and installation of the injection piping to the filter building. The total estimated installation time after delivery is one week, assuming that the site work and prefabrication of the shed all take place before the system is delivered.

Retrofit Existing Filters with GAC Media

The Braintree WTP has five filters containing a media mix of gravel, sand, and anthracite. The anthracite in each filter could be removed and replaced with approximately 35 inches of granular activated carbon (GAC). The addition of the GAC would be sufficient to effectively reduce PFAS during filtration. As part of this retrofit, the surface wash agitators should be removed to allow the maximum depth of GAC media to be installed.

A detailed opinion of probable cost for retrofitting the filters is attached and a summary is provided in the table below. Retrofitting the filters is the alternative with the lowest installation cost, including an estimate for engineering design, permitting, and construction administration work. However, the GAC media will reach its PFAS reduction capability and require the media be changed out every six months to prevent bleed through. This results in the highest operation and maintenance cost over four years of use when compared to the other alternatives.

Table 3: Retrofit Filters with GAC Media	
Cost of Installation:	$430,560.00
Cost of Operation & Maintenance:	$2,166,000.00
Total Cost Over Four Years:	**$2,596,560.00**

The media could be delivered within two to three weeks, and the retrofit could begin almost immediately, one filter at a time, without requiring the plant to shut down.

Installation of GAC Vessels

GAC contactor vessels are the most common units being used for PFAS removal for both surface water and groundwater sources. Installed post-filtration, two trains including a lead and a lag vessel would be required to meet the plant's flow and water quality goals. These trains can be installed outside of the filter building, in between the footprint of the existing sedimentation basins (Figure 1), without requiring an enclosure. The GAC vessels can operate without PFAS breakthrough for twice as long as the retrofitted filters. After the initial virgin material is changed out, it can be regenerated offsite and then reused at the plant. Additionally, there is the potential for these vessels to be reused as redundant equipment at the future TTRWTP, although there is more analysis required to confirm this.

These vessels are available for both purchase and rental, with only a $30,000 installation cost difference between the two. The installation cost also includes an estimate for engineering design, permitting, and construction administration work for both alternatives. A summary is provided below, with a more detailed opinion of probable cost attached. The vessels have a low operation and maintenance cost since they do not require any maintenance work outside of regular backwashes (which can be automated) and media replacement every 14 months. However, these vessels require a large amount of additional piping to connect to the WTP, as well as expensive wet well and pumping upgrades to intercept the existing filter effluent pipeline.

Table 4: Purchase GAC Vessels	
Cost of Installation:	$2,065,860.00
Cost of Operation & Maintenance:	$564,680.00
Total Cost Over Four Years:	**$2,630,540.00**

Table 5: Rent GAC Vessels	
Cost of Installation:	$2,033,360.00
Cost of Operation & Maintenance:	$564,680.00
Total Cost Over Four Years:	**$2,598,040.00**

Vessels for rent are available immediately, and vessels for purchase can be fabricated in 14 weeks. There is at least one month of work required for curing the concrete pad before installation, and at least one month of work required for the piping modifications and connections to the existing plant after delivery.

Installation of IX Resin Vessels

Ion exchange (IX) resin vessels are similar to the GAC vessels in that they will be installed in the same location (Figure 1) and require similar piping, wet well, and pumping modifications. The resin will require periodic change outs, but will last almost twice as long as the GAC media and can reduce PFAS levels to 10 ppt or less. Once the ion exchange resin has experienced breakthrough, it cannot be regenerated.

These units are available for both purchase and rent, with the cost to rent the equipment adding a premium and making it the most expensive alternative to install. This installation cost also includes an estimate for engineering design, permitting, and construction administration work for both alternatives. A summary is provided below, with a more detailed opinion of probable cost attached. Although the IX resin requires less frequent change outs, it is a more expensive material and results in one of the higher operation and maintenance costs over a four year period. Note that two vessels in a lead-lag train are included in the purchase option, compared to four lead vessels included in the rental option. This affects both the volume and frequency of resin replacement.

Table 6: Purchase IX Resin Vessels

Cost of Installation:	$2,800,360.00
Cost of Operation & Maintenance:	$698,870.00
Total Cost Over Four Years:	**$3,499,230.00**

Table 7: Rent IX Resin Containers

Cost of Installation:	$4,394,580.00
Cost of Operation & Maintenance:	$643,430.00
Total Cost Over Four Years:	**$5,038,010.00**

The containers for rent are available immediately, and vessels for purchase will take 35 weeks to fabricate. There is at least one month of work required for curing the concrete pad before installation, and at least one month of work required after delivery for the piping modifications and connections to the existing treatment plant. There is also potential for these vessels to be reused at the future TTRWTP, although there is more analysis required to confirm this.

Summary

EP ranked each of the alternatives on the basis of installation cost, operations and maintenance costs over a period of four years, and on each system's PFAS reduction effectiveness. The rankings are included below, with number one being the most desirable system and number seven being the least desirable in each given category.

Table 8: Ranking by Installation Cost
1. Retrofit filters with GAC
2. Purchase silo & slurry eductor PAC system
3. Rent unloader & slurry eductor PAC system
4. Rent GAC vessels
5. Purchase GAC Vessels
6. Purchase IX resin vessels
7. Rent IX resin containers

Table 9: Ranking by O&M Cost
1. Rent unloader & slurry eductor PAC system
2. Purchase silo & slurry eductor PAC system
3. Purchase *or* Rent GAC vessels
4. Purchase IX vessels
5. Rent IX resin containers
6. Retrofit filters with GAC

Table 10: Ranking by PFAS Reduction Effectiveness
1. Purchase *or* Rent IX resin system
2. Purchase *or* Rent GAC vessels
3. Retrofit filters with GAC
4. Purchase *or* Rent Slurry Eductor PAC System

To more easily compare the total costs of each alternative, the table below includes installation cost, operation and maintenance costs, and the total costs over four years for each system.

Table 11: Summary of Opinion of Probable Costs

	Installation	O&M Over 4 Years	**Total**
Purchase of Silo & Slurry Eductor PAC System	$521,320.00	$501,300.00	**$1,022,620.00**
Rent Big Bag Unloader & Slurry Eductor PAC System	$648,110.00	$465,880.00	**$1,113,990.00**
Retrofit Filters with GAC Media	$430,560.00	$2,166,000.00	**$2,596,560.00**
Rent GAC Vessels	$2,033,360.00	$564,680.00	**$2,598,040.00**
Purchase GAC Vessels	$2,065,860.00	$564,680.00	**$2,630,540.00**
Purchase IX Resin Vessels	$2,800,360.00	$698,870.00	**$3,499,230.00**
Rent IX Resin Containers	$4,394,580.00	$643,430.00	**$5,038,010.00**

In addition to these categories, the pros and cons of each alternative was analyzed and a list is included below.

	Pros	Cons
Purchase Silo & Slurry Eductor PAC System	- Low installation cost - Low O&M cost	- Requires high PAC dosage to reduce PFAS - Additional residuals management costs - Requires 18 weeks to fabricate
Rent Unloader & Slurry Eductor PAC System	- Low installation cost - Lowest O&M cost	- Requires high PAC dosage to reduce PFAS - Additional residuals management costs - No slurry units are currently available, would require 10-12 weeks to fabricate
Retrofit Filters with GAC	- Lowest installation cost - GAC media is readily available and can be delivered in 2-3 weeks - Filters can be retrofitted & operational sooner than other alternatives	- Highest O&M cost - Existing filter media was recently replaced by the Town
Purchase GAC Vessels	- Low O&M cost - Media can be regenerated - Can be fabricated in 14 weeks	- High installation cost - Installation will require at least 1-2 months of site work and piping modifications
Rent GAC Vessels	- Low O&M cost - Media can be regenerated - Units for rent are immediately available	- Installation will require at least 1-2 months of site work and piping modifications
Purchase IX Resin Vessels	- Can reduce PFAS to non-detect levels	- High installation cost - High O&M cost - Requires 35 weeks to fabricate in addition to at least 1-2 months of site work and piping modifications - Resin cannot be regenerated
Rent IX Resin Containers	- Can reduce PFAS to non-detect levels - Units for rent are immediately available	- Highest installation cost - High O&M cost - Installation will require at least 1-2 months of site work and piping modifications - Resin cannot be regenerated

Recommendation

Upon completing our assessment of each of the proposed alternatives, EP recommends the Town consider the PAC systems as the most advantageous option for the interim PFAS reduction system. By either renting the big bag unloader and slurry eductor or purchasing the silo and slurry eductor, Braintree WTP can reduce PFAS levels at a low installation and a low operations and maintenance cost. In addition, the WTP operators and MassDEP are already familiar with the addition of PAC at the plant. Finally, either system will provide more PFAS reduction and better PAC dosing control in a dust-free environment and in a less labor-intensive manner than the existing hopper system.

EP also recommends that the Town begin discussions with the Tri-Town Board of Water Commissioners, recommending preliminary investigations into the source of PFAS within Great Pond. Potential identification and remediation of pollutants is always a preference to implementation of treatment processes at municipal water treatment plants. If a source and responsible party can be identified costs of either remediation or treatment could be assessed against the entity identified.

Once you've had an opportunity to review the analysis and recommendation for a new PFAS removal system, EP would like to schedule a meeting to discuss these alternatives at your earliest convenience.

Attachments

Figure 1 – Proposed Area of Installation

Attachment A – Opinion of Probable Costs

Attachment B – Equipment Cut sheets

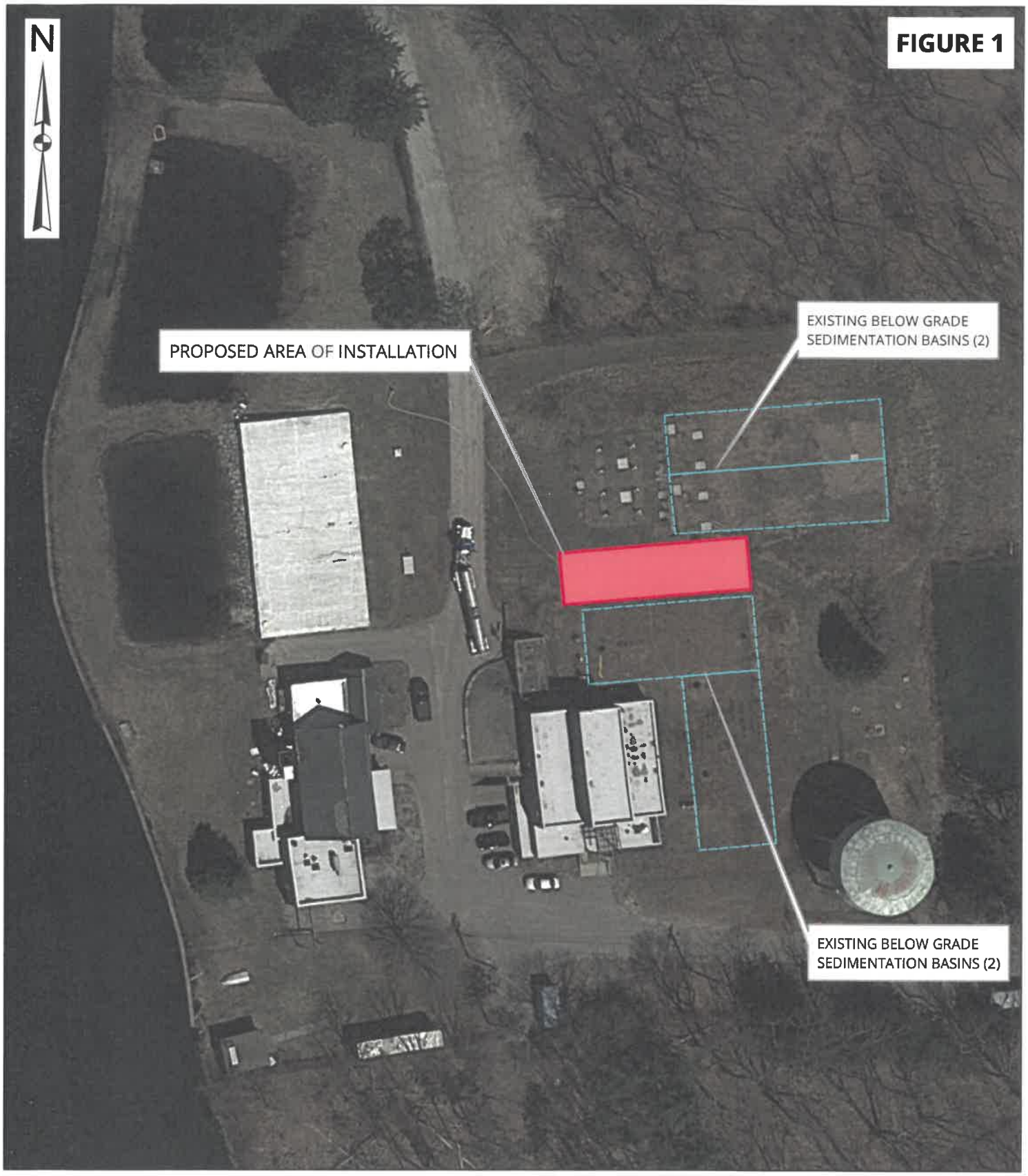

ENVIRONMENTAL PARTNERS

Proposed Area of Installation
Braintree WTP Alternative PAC System
February 2020

0 25 50 100 150 Feet

1 inch = 60 feet

TOWN OF BRAINTREE INCORPORATED 1640 MASSACHUSETTS

ATTACHMENT A

Opinion of Probable Costs

Braintree Great Pond Water Treatment Plant
PFAS Removal System
Engineers Opinion of Probable Cost

Retrofit Filters with GAC						
Work Item Description	Unit of Measure	Approx. Quantity	Unit Price	Unit Price Material	Unit Price Labor	**Estimated Cost**
Cost of Installation:						
Demolish Surface Washers	EA	20	$120.00	$0.00	$120.00	$2,400.00
Replace Anthracite with 34.7" GAC Media	LB	136,750	$1.92	$1.00	$0.92	$262,560.00
Legally Dispose of Spent Anthracite	TON	60	$165.00	$0.00	$165.00	$9,900.00
				Subtotal	*$*	*264,960.00*
				30% Contingency	*$*	*79,488.00*
				Installation Subtotal	*$*	*344,448.00*
				25% Engineering[1]	*$*	*86,112.00*
				Total Cost of Installation	***$***	***430,560.00***
Work Item Description	Unit of Measure	Approx. Quantity	Unit Price	Unit Price Material	Unit Price Labor	**Estimated Cost**
Cost to Operate:						
Year 1 - Operation & Maintenance[2]	LS	0	$0.00	$0.00	$0.00	$0.00
Year 1 - Spent GAC Media Replacement[3]	LS	1	$262,460.00	$136,650.00	$125,810.00	$262,460.00
Year 2 - Operation & Maintenance[2]	LS	0	$0.00	$0.00	$0.00	$0.00
Year 2 - Spent GAC Media Replacement[3]	LS	2	$266,240.00	$136,650.00	$129,590.00	$532,480.00
Year 3 - Operation & Maintenance[2]	LS	0	$0.00	$0.00	$0.00	$0.00
Year 3 - Spent GAC Media Replacement[3]	LS	2	$270,130.00	$136,650.00	$133,480.00	$540,260.00
Year 4 - Operation & Maintenance[2]	LS	0	$0.00	$0.00	$0.00	$0.00
Year 4 - Spent GAC Media Replacement[3]	LS	2	$274,140.00	$136,650.00	$137,490.00	$548,280.00
				Subtotal	*$*	*1,883,480.00*
				15% Contingency	*$*	*282,522.00*
				Total Cost of Operation	***$***	***2,166,000.00***

Notes:

1. Cost of Engineering will vary based on the bidding requirements, and may be reduced if the project is bid with an Emergency Waiver.

2. Where the Estimated Cost is $0.00, there are no costs associated with operation and maintenance anticipated for that year.

3. Further water quality testing is needed to confirm GAC bed life.

ENVIRONMENTAL PARTNERS

Braintree Great Pond Water Treatment Plant
PFAS Removal System
Engineers Opinion of Probable Cost

Purchase Silo System & Slurry Eductor PAC System

Work Item Description	Unit of Measure	Approx. Quantity	Unit Price	Unit Price Material	Unit Price Labor	Estimated Cost
Cost of Installation:						
Demolish Existing Hopper	LS	1	$1,000.00	$0.00	$1,000.00	$1,000.00
Silo and Slurry Eductor System	EA	1	$245,100.00	$163,400.00	$81,700.00	$245,100.00
Clearing and Grubbing	SF	1,200	$3.00	$0.00	$3.00	$3,600.00
Site Grading	SY	130	$15.00	$10.00	$5.00	$1,950.00
Equipment Pad	CY	4	$450.00	$300.00	$150.00	$1,800.00
1" Sch. 80 PVC Piping	LF	90	$52.00	$40.00	$12.00	$4,680.00
Pipe Insulation	LF	90	$2.00	$1.00	$1.00	$180.00
Misc. Piping, Fittings, & Appurtenances	LS	1	$25,000.00	10%		$25,000.00
Electrical Work	LS	1	$37,500.00	15%		$37,500.00
Instrumentation Wiring and SCADA Programming	LS	1	$50,000.00	20%		$50,000.00
				Subtotal	*$*	*320,810.00*
				30% Contingency	*$*	*96,243.00*
				Installation Subtotal	*$*	*417,053.00*
				25% Engineering [1]	*$*	*104,263.25*
				Total Cost of Installation	***$***	***521,320.00***

Work Item Description	Unit of Measure	Approx. Quantity	Unit Price	Unit Price Material	Unit Price Labor	Estimated Cost
Cost to Operate:						
Year 1 - Operation & Maintenance[2]	LS	0	$22,000.00	$7,500.00	$14,500.00	$0.00
Year 1 - Powder Activated Carbon	LS	1	$69,700.00	$69,700.00	$0.00	$69,700.00
Year 1 - Residuals Management[2]	CY	0	$76.75	$0.00	$76.75	$0.00
Year 2 - Operation & Maintenance	LS	1	$22,500.00	$7,500.00	$15,000.00	$22,500.00
Year 2 - Powder Activated Carbon	LS	1	$75,870.00	$75,870.00	$0.00	$75,870.00
Year 2 - Residuals Management[3]	CY	445	$80.00	$0.00	$80.00	$35,600.00
Year 3 - Operation & Maintenance[2]	LS	0	$23,000.00	$7,500.00	$15,500.00	$0.00
Year 3 - Powder Activated Carbon	LS	1	$82,040.00	$82,040.00	$0.00	$82,040.00
Year 3 - Residuals Management[2]	CY	0	$83.25	$0.00	$83.25	$0.00
Year 4 - Operation & Maintenance	LS	1	$23,500.00	$7,500.00	$16,000.00	$23,500.00
Year 4 - Powder Activated Carbon	LS	1	$88,210.00	$88,210.00	$0.00	$88,210.00
Year 4 - Residuals Management[3]	CY	445	$86.50	$0.00	$86.50	$38,492.50
				Subtotal	*$*	*435,912.50*
				15% Contingency	*$*	*65,386.88*
				Total Cost of Operation	***$***	***501,300.00***

Notes:

1. Cost of Engineering will vary based on the bidding requirements, and may be reduced if the project is bid with an Emergency Waiver.

2. Where the Estimated Cost is $0.00, there are no costs associated with operation, maintenance, or residuals management anticipated for that year.

3. Cost of residuals management due to the addition of PAC is subject to change: current assumption is based on emptying two geotubes every two years.

ENVIRONMENTAL PARTNERS

Braintree Great Pond Water Treatment Plant
PFAS Removal System
Engineers Opinion of Probable Cost

Rent Unloader & Slurry Eductor PAC System

Work Item Description	Unit of Measure	Approx. Quantity	Unit Price	Unit Price Material	Unit Price Labor	Estimated Cost
Cost of Installation:						
Demolish Existing Hopper	LS	1	$1,000.00	$0.00	$1,000.00	$1,000.00
PAC Shed	LS	1	$35,000.00	$25,000.00	$10,000.00	$35,000.00
Big Bag Hopper and Slurry Eductor System	EA	1	$258,720.00	$235,200.00	$23,520.00	$258,720.00
1" Sch. 80 PVC Piping	LF	5	$52.00	$40.00	$12.00	$260.00
Equipment Pad	CY	5	$52.50	$35.00	$17.50	$262.50
Electrical Work	LS	1	$51,796.00	20%		$51,796.00
Instrumentation Wiring and SCADA Programming	LS	1	$51,796.00	20%		$51,796.00
				Subtotal	*$*	*398,834.50*
				30% Contingency	*$*	*119,650.35*
				Installation Subtotal	*$*	*518,484.85*
				25% Engineering[1]	*$*	*129,621.21*
				Total Cost of Installation	***$***	***648,110.00***

Work Item Description	Unit of Measure	Approx. Quantity	Unit Price	Unit Price Material	Unit Price Labor	Estimated Cost
Cost to Operate:						
Year 1 - Operation & Maintenance[2]	LS	0	$7,400.00	$2,500.00	$4,900.00	$0.00
Year 1 - Powder Activated Carbon	LS	1	$69,700.00	$69,700.00	$0.00	$69,700.00
Year 1 - Residuals Management[2]	CY	0	$76.75	$0.00	$76.75	$0.00
Year 2 - Operation & Maintenance	LS	1	$7,500.00	$2,500.00	$5,000.00	$7,500.00
Year 2 - Powder Activated Carbon	LS	1	$75,870.00	$75,870.00	$0.00	$75,870.00
Year 2 - Residuals Management[3]	CY	445	$80.00	$0.00	$80.00	$35,600.00
Year 3 - Operation & Maintenance[2]	LS	0	$7,600.00	$2,500.00	$5,100.00	$0.00
Year 3 - Powder Activated Carbon	LS	1	$82,040.00	$82,040.00	$0.00	$82,040.00
Year 3 - Residuals Management[2]	CY	0	$83.25	$0.00	$83.25	$0.00
Year 4 - Operation & Maintenance	LS	1	$7,700.00	$2,500.00	$5,200.00	$7,700.00
Year 4 - Powder Activated Carbon	LS	1	$88,210.00	$88,210.00	$0.00	$88,210.00
Year 4 - Residuals Management[3]	CY	445	$86.50	$0.00	$86.50	$38,492.50
				Subtotal	*$*	*405,112.50*
				15% Contingency	*$*	*60,766.88*
				Total Cost of Operation	***$***	***465,880.00***

Note:

1. Cost of Engineering will vary based on the bidding requirements, and may be reduced if the project is bid with an Emergency Waiver.

2. Where the Estimated Cost is $0.00, there are no costs associated with operation, maintenance, or residuals management anticipated for that year.

3. Cost of residuals management due to the addition of PAC is subject to change: current assumption is based on emptying two geotubes every two years.

ENVIRONMENTAL PARTNERS

Braintree Great Pond Water Treatment Plant
PFAS Removal System
Engineers Opinion of Probable Cost

Purchase New GAC Units						
Work Item Description	Unit of Measure	Approx. Quantity	Unit Price	Unit Price Material	Unit Price Labor	**Estimated Cost**
Cost of Installation:						
Clearing and Grubbing	SF	1,200	$3.00	$0.00	$3.00	$3,600.00
Site Grading	SY	130	$15.00	$10.00	$5.00	$1,950.00
Wet Well and Filter Effluent Piping Upgrades	LS	1	$150,000.00	$100,000.00	$50,000.00	$150,000.00
Equipment Pad	CY	35	$450.00	$300.00	$150.00	$15,750.00
GAC Filter and Media	EA	4	$181,500.00	$165,000.00	$16,500.00	$726,000.00
Exterior Piping	LS	1	$254,000.00	$191,000.00	$63,000.00	$254,000.00
Electrical Work	LS	1	$70,000.00	$40,000.00	$30,000.00	$70,000.00
Instrumentation Wiring and SCADA Programming	LS	1	$50,000.00	$30,000.00	$20,000.00	$50,000.00
				Subtotal	*$*	*1,271,300.00*
				30% Contingency	*$*	*381,390.00*
				Installation Subtotal	*$*	*1,652,690.00*
				25% Engineering [1]	*$*	*413,172.50*
				Total Cost of Installation	***$***	***2,065,860.00***
Work Item Description	Unit of Measure	Approx. Quantity	Unit Price	Unit Price Material	Unit Price Labor	**Estimated Cost**
Cost to Operate:						
Year 1 - Operation & Maintenance[2]	LS	0	$0.00	$0.00	$0.00	$0.00
Year 1 - Spent GAC Media Replacement[2]	LS	0	$159,900.00	$100,000.00	$59,900.00	$0.00
Year 2 - Operation & Maintenance[2]	LS	0	$0.00	$0.00	$0.00	$0.00
Year 2 - Spent GAC Media Replacement	LS	1	$161,800.00	$100,000.00	$61,800.00	$161,800.00
Year 3 - Operation & Maintenance[2]	LS	0	$0.00	$0.00	$0.00	$0.00
Year 3 - Spent GAC Media Replacement	LS	1	$163,660.00	$100,000.00	$63,660.00	$163,660.00
Year 4 - Operation & Maintenance[2]	LS	0	$0.00	$0.00	$0.00	$0.00
Year 4 - Spent GAC Media Replacement	LS	1	$165,570.00	$100,000.00	$65,570.00	$165,570.00
				Subtotal	*$*	*491,030.00*
				15% Contingency	*$*	*73,654.50*
				Total Cost of Operation	***$***	***564,680.00***

Notes:

1. Cost of Engineering will vary based on the bidding requirements, and may be reduced if the project is bid with an Emergency Waiver.

2. Where the Estimated Cost is $0.00, there are no costs associated with operation, maintenance, or media replacement anticipated for that year.

ENVIRONMENTAL PARTNERS

Braintree Great Pond Water Treatment Plant
PFAS Removal System
Engineers Opinion of Probable Cost

Rent New GAC Units						
Work Item Description	Unit of Measure	Approx. Quantity	Unit Price	Unit Price Material	Unit Price Labor	**Estimated Cost**
Cost of Installation:						
Clearing and Grubbing	SF	1,200	$3.00	$0.00	$3.00	$3,600.00
Site Grading	SY	130	$15.00	$10.00	$5.00	$1,950.00
Wet Well and Filter Effluent Piping Upgrades	LS	1	$150,000.00	$100,000.00	$50,000.00	$150,000.00
Equipment Pad	CY	35	$450.00	$300.00	$150.00	$15,750.00
GAC Filter System	EA	4	$136,500.00	$120,000.00	$16,500.00	$546,000.00
GAC Media	EA	4	$40,000.00	$25,000.00	$15,000.00	$160,000.00
Exterior Piping	LS	1	$254,000.00	$191,000.00	$63,000.00	$254,000.00
Electrical Work	LS	1	$70,000.00	$40,000.00	$30,000.00	$70,000.00
Instrumentation Wiring and SCADA Programming	LS	1	$50,000.00	$30,000.00	$20,000.00	$50,000.00
				Subtotal	*$*	*1,251,300.00*
				30% Contingency	*$*	*375,390.00*
				Installation Subtotal	*$*	*1,626,690.00*
				25% Engineering[1]	*$*	*406,672.50*
				Total Cost of Installation	***$***	***2,033,360.00***
Work Item Description	Unit of Measure	Approx. Quantity	Unit Price	Unit Price Material	Unit Price Labor	**Estimated Cost**
Cost to Operate:						
Year 1 - Operation & Maintenance[2]	LS	0	$0.00	$0.00	$0.00	$0.00
Year 1 - Spent GAC Media Replacement[2]	LS	0	$0.00	$0.00	$0.00	$0.00
Year 2 - Operation & Maintenance[2]	LS	0	$0.00	$0.00	$0.00	$0.00
Year 2 - Spent GAC Media Replacement	LS	1	$161,800.00	$100,000.00	$61,800.00	$161,800.00
Year 3 - Operation & Maintenance[2]	LS	0	$0.00	$0.00	$0.00	$0.00
Year 3 - Spent GAC Media Replacement	LS	1	$163,660.00	$100,000.00	$63,660.00	$163,660.00
Year 4 - Operation & Maintenance[2]	LS	0	$0.00	$0.00	$0.00	$0.00
Year 4 - Spent GAC Media Replacement	LS	1	$165,570.00	$100,000.00	$65,570.00	$165,570.00
				Subtotal	*$*	*491,030.00*
				15% Contingency	*$*	*73,654.50*
				Total Cost of Operation	***$***	***564,680.00***

Notes:

1. Cost of Engineering will vary based on the bidding requirements, and may be reduced if the project is bid with an Emergency Waiver.

2. Where the Estimated Cost is $0.00, there are no costs associated with operation, maintenance, or media replacement anticipated for that year.

ENVIRONMENTAL PARTNERS

Braintree Great Pond Water Treatment Plant
PFAS Removal System
Engineers Opinion of Probable Cost

Rent Ion Exchange Resin Units						
Work Item Description	Unit of Measure	Approx. Quantity	Unit Price	Unit Price Material	Unit Price Labor	**Estimated Cost**
Cost to Operate:						
Clearing and Grubbing	SF	1,200	$3.00	$0.00	$3.00	$3,600.00
Site Grading	SY	130	$15.00	$10.00	$5.00	$1,950.00
Wet Well and Filter Effluent Piping Upgrades	LS	1	$150,000.00	$100,000.00	$50,000.00	$150,000.00
Equipment Pad	CY	35	$450.00	$300.00	$150.00	$15,750.00
IX Filter Container	EA	2	$893,375.00	$893,375.00		$1,786,750.00
IX Resin (Per Container)	EA	2	$186,153.00	$186,153.00		$372,306.00
Exterior Piping	LS	1	$254,000.00	$191,000.00	$63,000.00	$254,000.00
Electrical Work	LS	1	$70,000.00	$40,000.00	$30,000.00	$70,000.00
Instrumentation Wiring and SCADA Programming	LS	1	$50,000.00	$30,000.00	$20,000.00	$50,000.00
				Subtotal	*$*	*2,704,356.00*
				30% Contingency	*$*	*811,306.80*
				Installation Subtotal	*$*	*3,515,662.80*
				25% Engineering [1]	*$*	*878,915.70*
				Total Cost of Installation	***$***	***4,394,580.00***
Work Item Description	Unit of Measure	Approx. Quantity	Unit Price	Unit Price Material	Unit Price Labor	**Estimated Cost**
Cost to Operate:						
Year 1 - Operation & Maintenance[2]	LS	0	$0.00	$0.00	$0.00	$0.00
Year 1 - Spent Resin Replacement[2]	CF	0	$139,425.00	$124,200.00	$15,225.00	$0.00
Year 2 - Operation & Maintenance[2]	LS	0	$0.00	$0.00	$0.00	$0.00
Year 2 - Spent Resin Replacement	EA	2	$139,650.00	$124,200.00	$15,450.00	$279,300.00
Year 3 - Operation & Maintenance[2]	LS	0	$0.00	$0.00	$0.00	$0.00
Year 3 - Spent Resin Replacement[2]	CF	0	$139,875.00	$124,200.00	$15,675.00	$0.00
Year 4 - Operation & Maintenance[2]	LS	0	$0.00	$0.00	$0.00	$0.00
Year 4 - Spent Resin Replacement	EA	2	$140,100.00	$124,200.00	$15,900.00	$280,200.00
				Subtotal	*$*	*559,500.00*
				15% Contingency	*$*	*83,925.00*
				Total Cost of Operation	***$***	***643,430.00***

Notes:

1. Cost of Engineering will vary based on the bidding requirements, and may be reduced if the project is bid with an Emergency Waiver.

2. Where the Estimate Cost is $0.00, there are no costs associated with operation, maintenance, or resin replacement anticipated for that year.

ENVIRONMENTAL PARTNERS

Braintree Great Pond Water Treatment Plant
PFAS Removal System
Engineers Opinion of Probable Cost

Purchase New Ion Exchange Resin Units						
Work Item Description	Unit of Measure	Approx. Quantity	Unit Price	Unit Price Material	Unit Price Labor	**Estimated Cost**
Cost to Operate:						
Clearing and Grubbing	SF	1,200	$3.00	$0.00	$3.00	$3,600.00
Site Grading	SY	130	$15.00	$10.00	$5.00	$1,950.00
Wet Well and Filter Effluent Piping Upgrades	LS	1	$150,000.00	$100,000.00	$50,000.00	$150,000.00
Equipment Pad	CY	35	$450.00	$300.00	$150.00	$15,750.00
IX Filter Vessel	EA	2	$295,000.00	$245,000.00	$50,000.00	$590,000.00
IX Resin (Per Vessel)	EA	2	$294,000.00	$264,000.00	$30,000.00	$588,000.00
Exterior Piping	LS	1	$254,000.00	$191,000.00	$63,000.00	$254,000.00
Electrical Work	LS	1	$70,000.00	$40,000.00	$30,000.00	$70,000.00
Instrumentation Wiring and SCADA Programming	LS	1	$50,000.00	$30,000.00	$20,000.00	$50,000.00
				Subtotal	*$*	*1,723,300.00*
				30% Contingency	*$*	*516,990.00*
				Installation Subtotal	*$*	*2,240,290.00*
				25% Engineering[1]	*$*	*560,072.50*
				Total Cost of Installation	***$***	***2,800,360.00***
Work Item Description	Unit of Measure	Approx. Quantity	Unit Price	Unit Price Material	Unit Price Labor	**Estimated Cost**
Cost to Operate:						
Year 1 - Operation & Maintenance	LS	1	$12,000.00	$10,000.00	$2,000.00	$12,000.00
Year 1 - Spent Resin Replacement[2]	CF	0	$279,225.00	$264,000.00	$15,225.00	$0.00
Year 2 - Operation & Maintenance	LS	1	$12,060.00	$10,000.00	$2,060.00	$12,060.00
Year 2 - Spent Resin Replacement	EA	1	$279,450.00	$264,000.00	$15,450.00	$279,450.00
Year 3 - Operation & Maintenance	LS	1	$12,120.00	$10,000.00	$2,120.00	$12,120.00
Year 3 - Spent Resin Replacement[2]	CF	0	$279,675.00	$264,000.00	$15,675.00	$0.00
Year 4 - Operation & Maintenance	LS	1	$12,180.00	$10,000.00	$2,180.00	$12,180.00
Year 4 - Spent Resin Replacement	EA	1	$279,900.00	$264,000.00	$15,900.00	$279,900.00
				Subtotal	*$*	*607,710.00*
				15% Contingency	*$*	*91,156.50*
				Total Cost of Operation	***$***	***698,870.00***

Notes:
1. Cost of Engineering will vary based on the bidding requirements, and may be reduced if the project is bid with an Emergency Waiver.
2. Where the Estimated Cost is $0.00, there are no costs associated with operation, maintenance, or resin replacement anticipated for that year.

ENVIRONMENTAL PARTNERS

ATTACHMENT B

Equipment Cutsheets

PAC Silo

Sodimate®

Powder handling expert

Bulk Storage Silo

Wastewater Treatment | Water Treatment | Flue Gas Treatment

Bulk Storage Steel Silo

Bulk storage silos made of steel are the perfect solution to store powdered reagents like hydrated lime, activated carbon, soda ash, and many other dry chemical powders. The cylindrical shape and the conical bottom allow a complete discharge of the product when combined with a mechanical arch breaker.

With a volume ranging from 200 to 7,000 ft^3, Sodimate helps to choose the right diameter and height of silos to comply with the technical definition of the customer.

Silos can be legged with a steel frame, with a skirt (to implement a room) or attached on a pad to be suspended through a concrete ceiling.

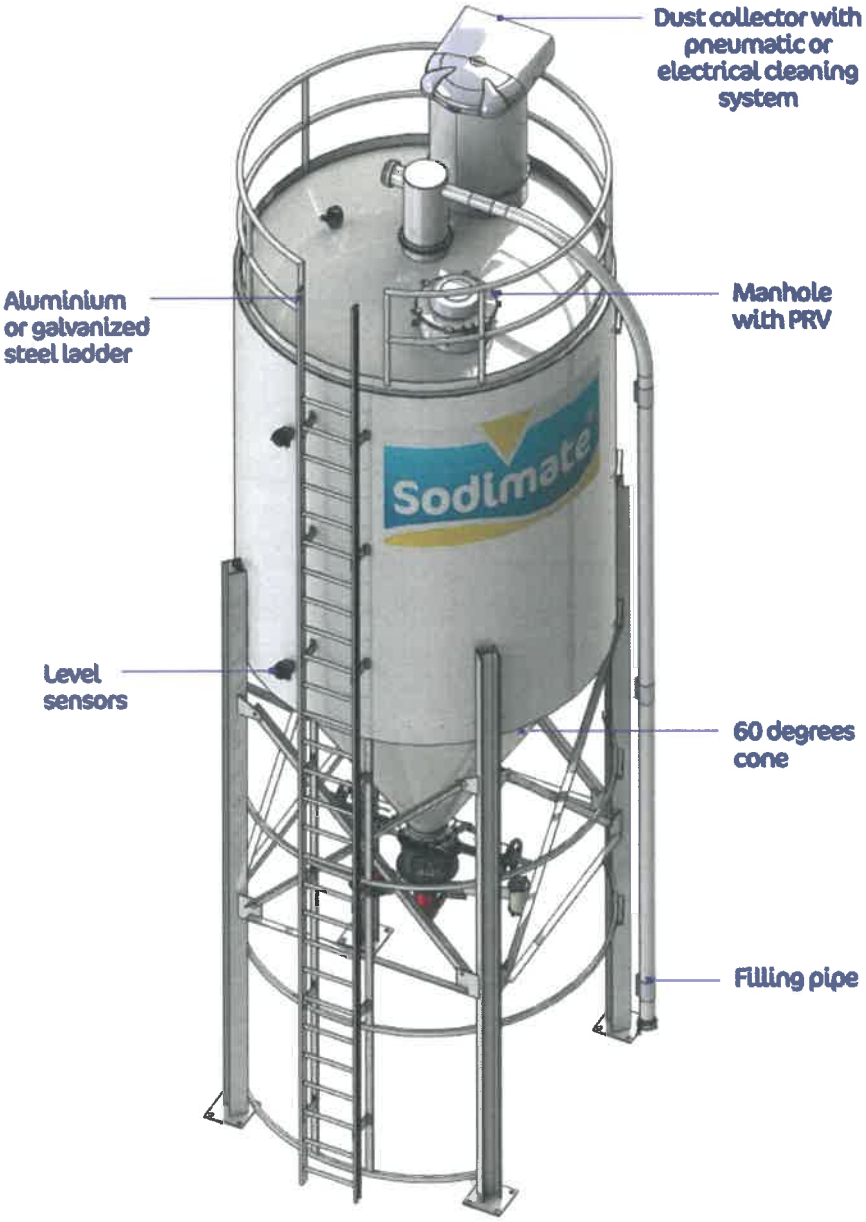

Advantages:

- Custom made silos in one-piece construction
- Protective linings and coatings
- ASME certification
- On-site delivery and installation
- Huge storage capacity
- Low maintenance cost

Sodimate®

Powder handling expert

Wastewater Treatment | Water Treatment | Flue Gas Treatment

Redundancy with stairway to access on both roofs

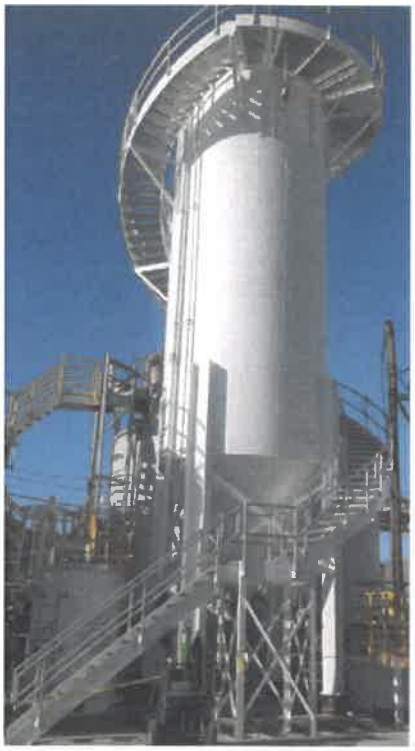

Skirted silo with stairway

Legged silo

Optional features:

- Load cells
- Skirt (room under the silo)
- Insulation
- Junction box at the ground level
- Safety cage OSHA compliant
- Stairway OSHA compliant
- Heater and thermostat
- Lighnting
- Specific color and lining
- Explosion proof vent

SILO HEIGHT(ft)

	300 ft^3	500 ft^3	750 ft^3	1000 ft^3	1500 ft^3	2500 ft^3	3500 ft^3	5000 ft^3
Ø10 ft	18'6"	21'1"	24'3"					
Ø12 ft			22'9"	25'1"	27'7"	38'6"	47'6"	60'11"
Ø14 ft						34'1"	40'8"	50'5"

*Height and capacity vary regarding the silo volume

Load cells for skirted silo

2950 W. Chicago Ave., Ste 205, Chicago IL 60622
Tel: 773-665-8800 Fax: 773-665-8805
www.sodimate-inc.com

PAC Slurry Eductor

Sodimate®

Powder handling expert

Slurry Eductor

Waste water Treatment | Water Treatment | Flue Gas Treatment

Slurry Eductor

Sodimate liquid/slurry eductors have been installed with a broad range of products such as micro sand, limestone, powder activated carbon, etc.

Applications of Sodimate slurry eductors range from adding a few pounds per hour to transporting over thousands of pounds per hour.

Sodimate Slurry eductor eliminates the use of slurry mixing tank, reduces the electrical consumption and floor footprint. The resulting slurry can be transfer horizontally and vertically with few pound of pressure at the process end injection point.

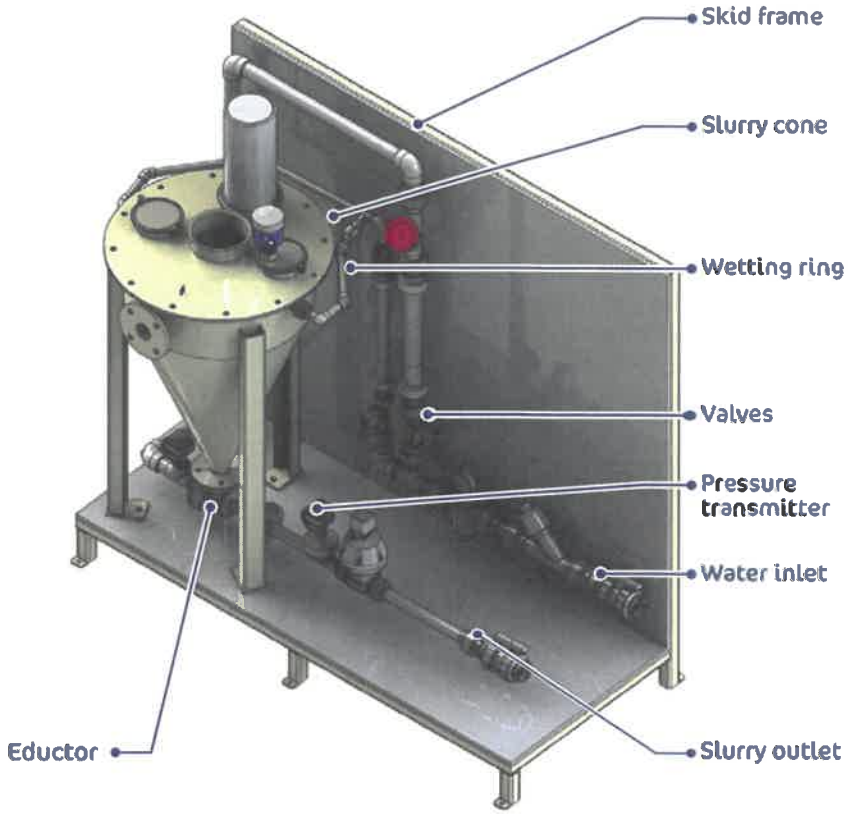

Advantages

- Dust free
- Long transfer distances with elevations and back pressure
- Low energy consumption
- Can be mounted on a skid
- Optional instrumentation

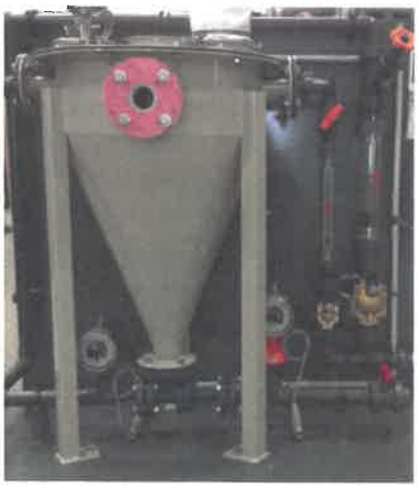

Sodimate®

Powder handling expert

Wastewater Treatment | Water Treatment | Flue Gas Treatment

Operation Principle

Sodimate slurry eductors use water or other liquids under pressure as the motive fluid, and operate on the venturi principle to mix dry chemicals into slurries.

Water is constantly injected inside the slurry cone to provide instantaneous hydration, reduce dust, and avoid clumps and 'fish-eyes'. The high-velocity jet of liquid from the eductor nozzle creates a vacuum, which causes the suction of the mixed liquid.

Eductors are an ideal way to continuously produce solutions or well blended slurries and are commonly used in chemical, food, power, pharmaceutical, and waste water applications.

The slurry eductor can be supplied with all necessary flow, pressure, control and regulation instrumentation.

Features

- **Slurry transfer without mixing tank**
- **Can be adapted to existing process**
- **Dust free unit system**

Options

- **Contact parts made of stainless steel**
- **Explosion proof instrumentation**
- **Skid mounted system**

Examples of transferred products
Powder activated carbon
Polymer
Soda Ash
Microsand

Ejector Size	Powder throughput
1"	2.2 gpm max
2"	4.4 gpm max
3"	11 gpm max
4"	22 gpm max

2950 W. Chicago Ave., Ste 205, Chicago IL 60622
Tel: 773-665-8800 Fax: 773-665-8805
www.sodimate-inc.com

PAC Big Bag Unloader

Sodimate®

Powder handling expert

Big Bag Unloader

Wastewater Treatment | Water Treatment | Flue Gas Treatment

Discharger and Feeder for Big Bags / Bulk Bags / FIBC :

The Big Bag Unloader is engineered to discharge up to 2 ton supersacs, ensuring an automatic and complete discharge of the dry chemical without product compaction.

The structure of the unloader can accept big bags loaded by forklift or can integrate manual or electrical hoists.

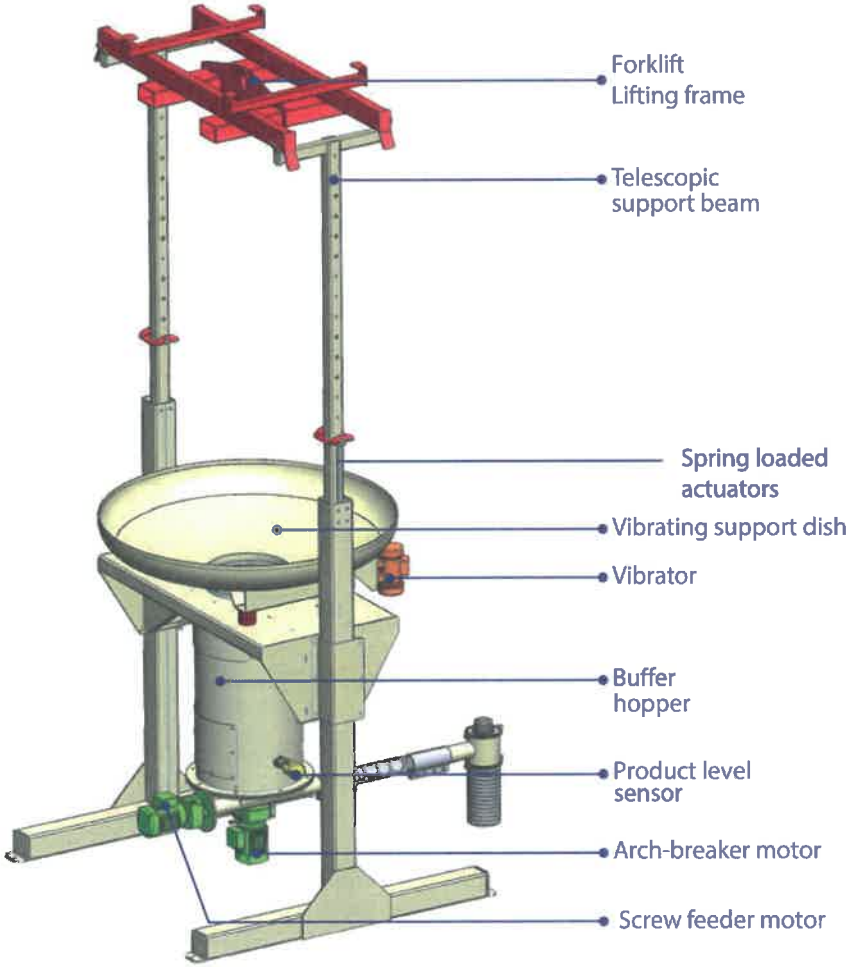

Advantages:

- Compact unit
- Suitable for bulk bags up to 2 tons
- Easy assembly
- Easy-to-use
- Rental units available
- Complete emptying of bulk bag
- Optimized dust control
- Self-loading version available with integrated hoist

Seld-loading version :

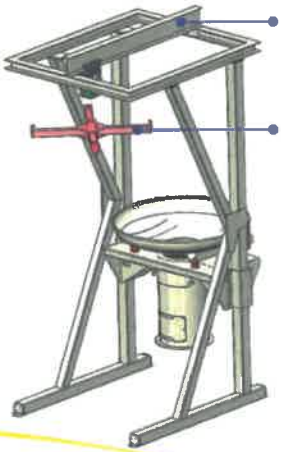

Installation Example:

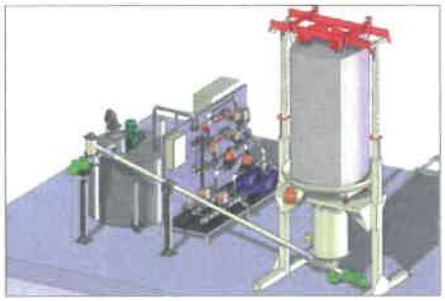

www.sodimate-inc.com

Sodimate

Powder handling expert

Wastewater Treatment | Water Treatment | Flue Gas Treatment

Operation:

The big bag is supported by two telescopic, spring-loaded arms and loaded on a vibrating dish that only vibrates when the sensor detects a lack of product in the hopper.

This sequence ensures the complete emptying of the bag and signals the operator when it is time to replace it.

The unit also comes equipped with Sodimate's mechanical arch-breaker and volumetric screw feeder. The screw feeder can be flexible or connected to an inclined conveyor to transfer the product vertically to the discharge point.

Products
Quicklime
Hydrated Lime
Powdered Activated Carbon (PAC)
Sodium Bicarbonate
Microsand
Soda Ash
Polymers
Plastic Pellets

Specifications:

- **Fabrication material: carbon steel, stainless steel 304/316**
- **Single or multiple screw feeders**
- **Big bags up to 2 tons**

Options :

- **Isolation diaphragm valve**
- **Dust collector**
- **Big Bag opening knife**
- **Load cells (gravimetric)**
- **Electrical hoist and trolley**
- **Explosion proof unit**

Screw Feeder type	Feedrate*
1½ "	1 ¾ ft^3/hr max.
2 "	15 ft^3/hr max.
3 "	50 ft^3/hr max.
3 ¼"	80 ft^3/hr max.
4 "	130 ft^3/hr max.
5 "	450 ft^3/hr max.

* feedrate may vary according to product and density

2950 W. Chicago Ave., Ste 205, Chicago IL 60622
Tel: 773-665-8800 Fax: 773-665-8805
www.sodimate-inc.com

GAC Vessels

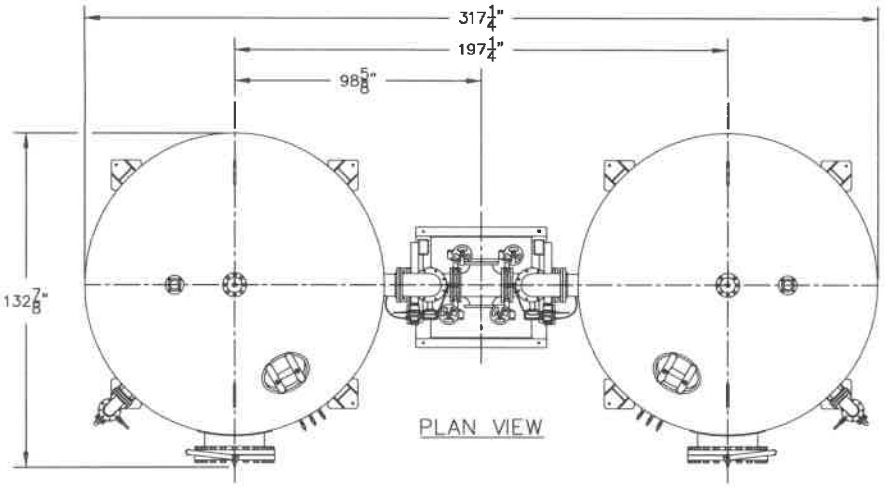

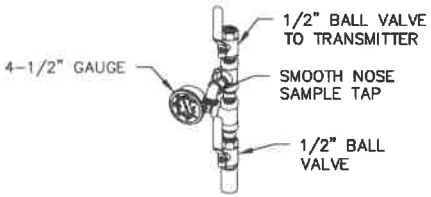

DETAIL "A"

1/2" PRESSURE/SAMPLE TAP
SCALE: 1"=1' QTY (4)

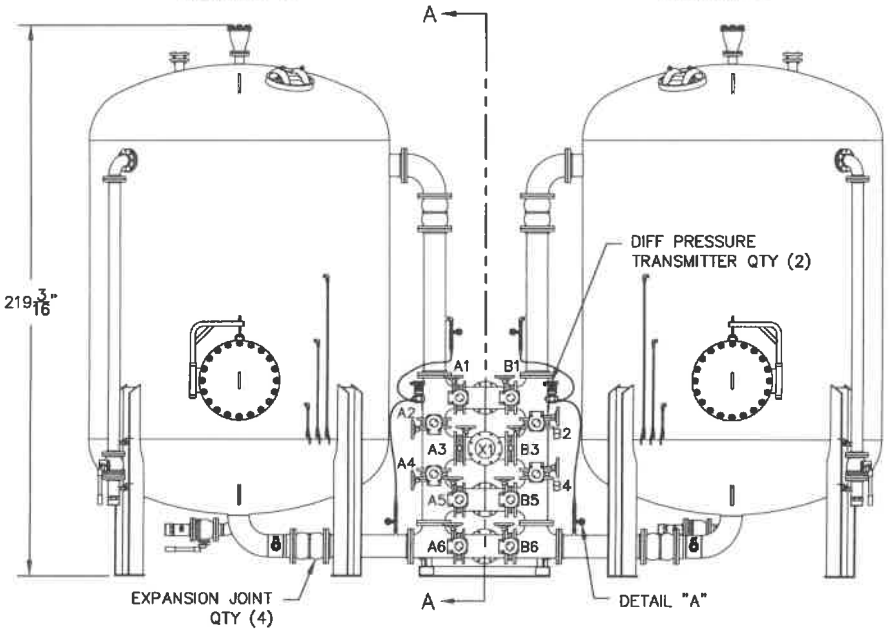

FRONT ELEVATION

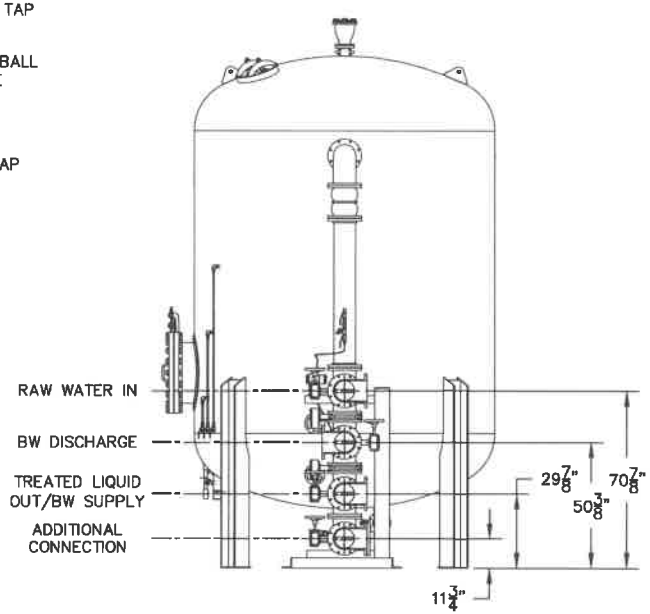

SECTION A–A

VALVE OPERATION MODE

MODE OF OPERATION	A1	A2	A3	A4	A5	A6	B1	B2	B3	B4	B5	B6	X1
UNIT A (ONLY) OPERATION	OPEN	CLOSED	CLOSED	CLOSED	OPEN	CLOSED	CLOSED	CLOSED	CLOSED	CLOSED	CLOSED	CLOSED	CLOSED
UNIT B (ONLY) OPERATION	CLOSED	CLOSED	CLOSED	CLOSED	CLOSED	CLOSED	OPEN	CLOSED	CLOSED	CLOSED	OPEN	CLOSED	CLOSED
SERIES FLOW OPERATION UNIT A TO UNIT B	OPEN	CLOSED	OPEN	OPEN	CLOSED	CLOSED	CLOSED	OPEN	OPEN	CLOSED	OPEN	CLOSED	CLOSED
SERIES FLOW OPERATION UNIT B TO UNIT A	CLOSED	OPEN	OPEN	CLOSED	OPEN	CLOSED	OPEN	CLOSED	OPEN	OPEN	CLOSED	CLOSED	CLOSED
PARALLEL FLOW OPERATION UNIT A & B	OPEN	CLOSED	CLOSED	CLOSED	OPEN	CLOSED	OPEN	CLOSED	CLOSED	CLOSED	OPEN	CLOSED	CLOSED
UNIT A ONLY BACKWASH	CLOSED	OPEN	OPEN	CLOSED	OPEN	CLOSED	CLOSED	CLOSED	CLOSED	CLOSED	CLOSED	CLOSED	OPEN
UNIT B ONLY BACKWASH	CLOSED	CLOSED	CLOSED	CLOSED	CLOSED	CLOSED	CLOSED	OPEN	OPEN	CLOSED	OPEN	CLOSED	OPEN
UNIT A FILTER TO WASTE	OPEN	CLOSED	OPEN	OPEN	CLOSED	CLOSED	CLOSED	CLOSED	CLOSED	CLOSED	CLOSED	CLOSED	OPEN
UNIT B FILTER TO WASTE	CLOSED	CLOSED	CLOSED	CLOSED	CLOSED	CLOSED	OPEN	CLOSED	OPEN	OPEN	CLOSED	CLOSED	OPEN

NOTES
1. ALL FLANGE PATTERNS STRADDLE PLANT NORTH CENTERLINE
2. ALL SYSTEM PROCESS VALVES TO BE BRAY SERIES 30, CAST IRON w/ HAND WHEEL OPERATOR
3. DIFFERENTIAL PRESSURE TRANSMITTERS TO BE SIEMENS SISTRANS P DS III MOUNTED ON A 3-WAY VALVE MANIFOLD
4. ALL ELEVATIONS MARKED FROM TOP OF FOUNDATION PAD
5. VALVE X1 INSTALLED ON SITE

tetraSOLV FILTRATION
1424 ABRAHAM DRIVE
ANDERSON, INDIANA 46013
Ph (765) 643-3941
Fax (765) 643-3949

ALL INFORMATION CONTAINED IN THIS DOCUMENT IS PROPERTY OF TETRASOLV FILTRATION AND MAY NOT BE REPRODUCED WITHOUT PERMISSION

REV NO	REVISION NOTE	DATE	SIGNATURE
1	MOD BW ORIENTATION, COMBINED TREATED OUT/BW SUPPLY, SHELL NT	11/12/19	SDB
2			
3			
4			
5			

CUSTOMER BARNSTABLE	JOB # TBD	DATE 10/21/2019	SCALE 1/4"=1'
DESIGNED BY S.BLITCHINGTON	SYSTEM_ASSEMBLY		
APPROVED BY –	QUANTITY 4	UNITS IPS	DRAWING # D-3.R-1

IX Resin Containers for Rental

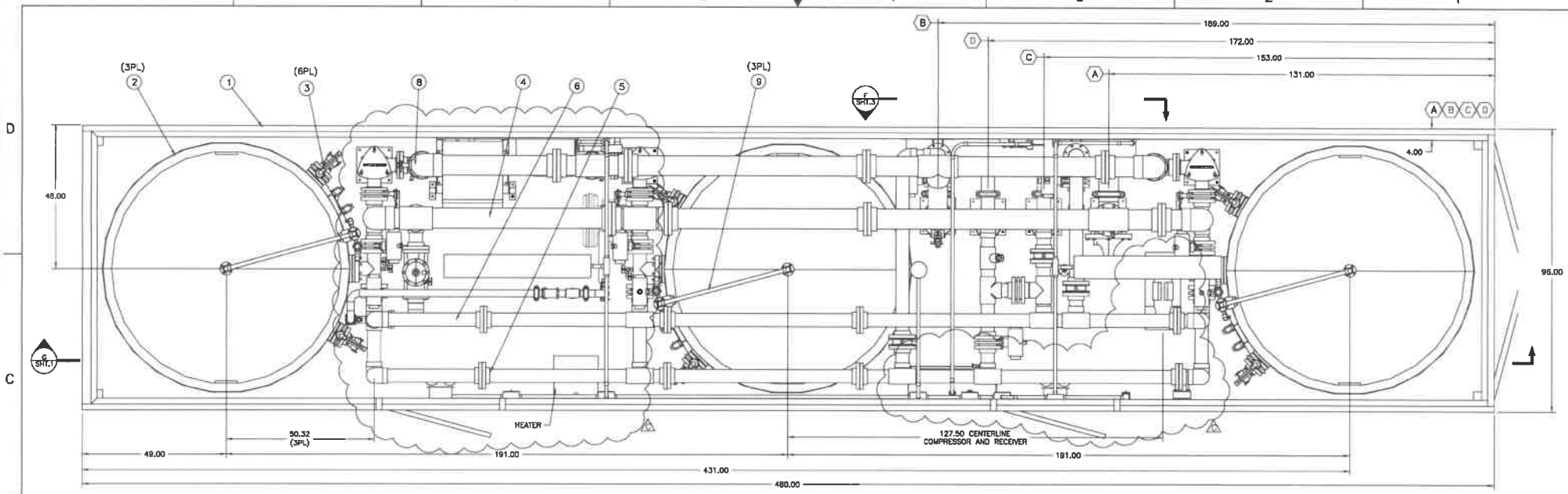

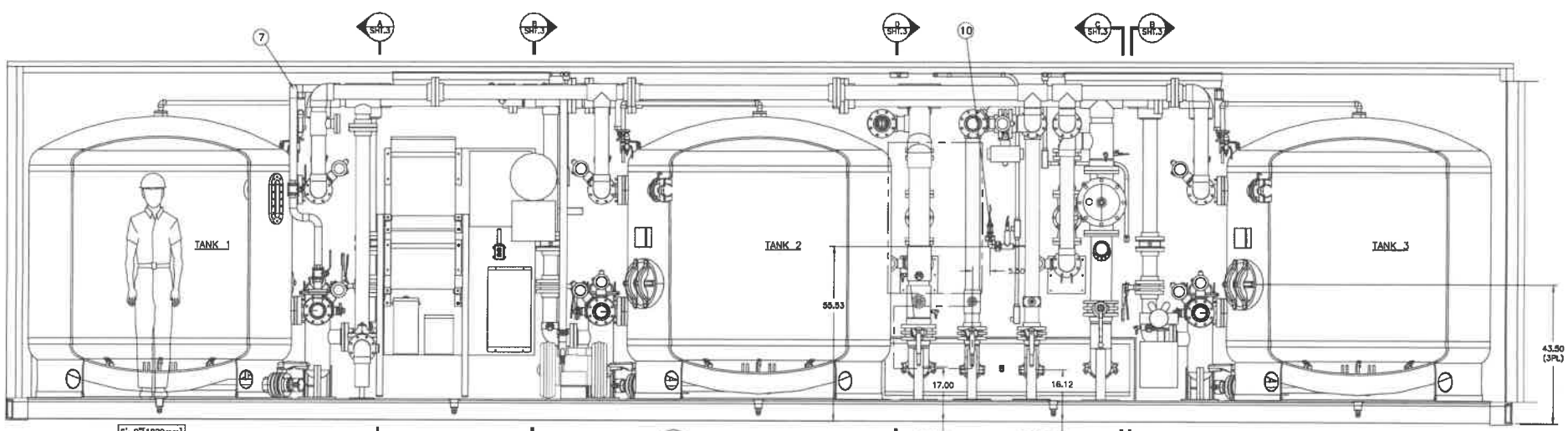

SECTION G–G
SCALE: NONE

REV	DESCRIPTION	ECO	DWN	APVD	DATE	CHKD
C	REVISED AS NOTED	–	SJ	HG	02AUG12	KW
B	REVISED AS NOTED	–	SJS	HG	09JUL12	JC
A	INITIAL RELEASE	–	BN	HG	11MAY12	JC

TOLERANCES UNLESS NOTED
DECIMALS: .X ± ; .XX ± 0.50 ; .XXX ± — ANGLES ± 0.5 ; FRAC ± 1/8"
DIMENSIONS IN INCHES DO NOT SCALE — THIRD ANGLE

		DATE
DRAWN BY	BN	03APR12
CHECKED BY	JC	18MAY12
APPROVED BY	KW	11MAY12
APPROVED BY	HG	11MAY12

GE Water & Process Technologies
GLOBAL HEADQUARTERS : TREVOSE, PA USA +1-215-355-3300 WWW.GEWATER.COM

THIS DRAWING, THE DESIGN AND THE PROCESS IT CONVEYS, IS THE PROPERTY OF GENERAL ELECTRIC COMPANY AND ITS AFFILIATES AND THE INFORMATION CONTAINED HEREIN IS PROPRIETARY INFORMATION WHICH IS NOT TO BE DISCLOSED TO ANYONE WITHOUT PRIOR WRITTEN CONSENT OF SAID COMPANY. THIS DRAWING IS TO BE USED EXCLUSIVELY FOR THE PURPOSES EXPRESSLY AUTHORIZED BY GENERAL ELECTRIC COMPANY AND ITS AFFILIATES. SUBSIDIARIES, OFFICERS AND QUALIFIED REPRESENTATIVES AND FOR NO OTHER PURPOSE. NEITHER THIS DRAWING, NOR ANY PORTION THEREOF, SHALL BE REPRODUCED WITHOUT THE PRIOR WRITTEN CONSENT OF SAID COMPANY, AND ANY SUCH REPRODUCTION SHALL BEAR THIS NOTICE.

CLIENT/JOB: GE MOBILE WATER AUTOFILTER 3X7

FILE: AUTOCAD

TITLE: GENERAL ARRANGEMENT SYS,PRETREATMENT,BWRO,CE

MATERIAL: 500208A–PG–02

SIZE	DRAWING NO.	REV
D	500208A–PG–02	C
PROJECT	500208	
SCALE 1:16	SHEET 1 OF 3	

P/N 0101082–RNP01

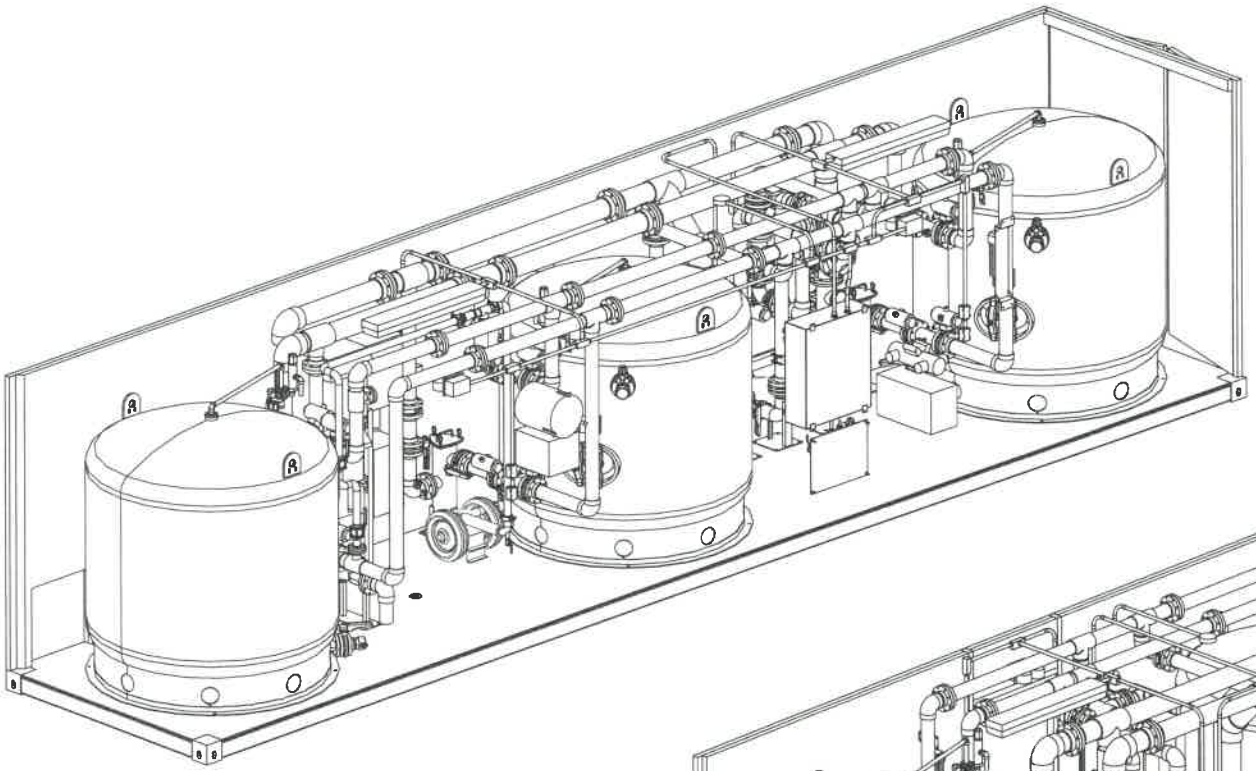

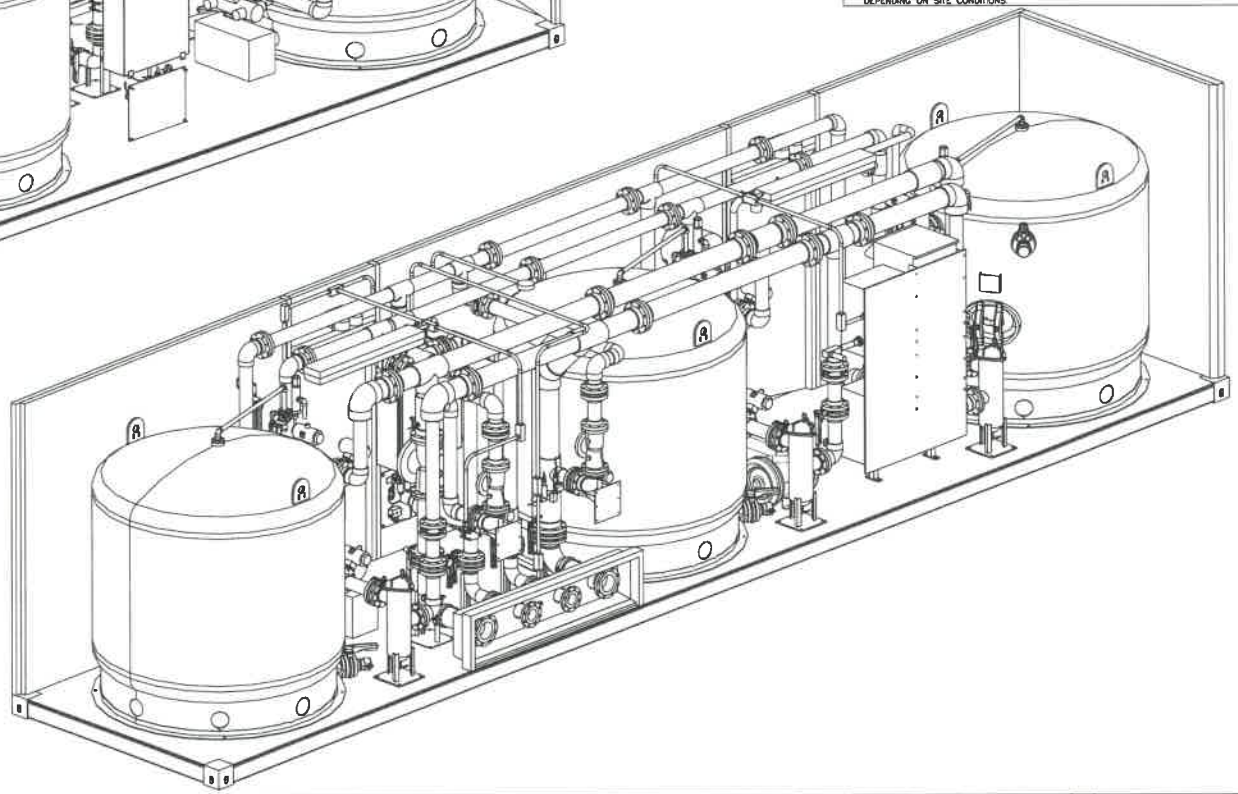

NOTES:

1. CONNECTION TABLE

ITEM	DESCRIPTION	MATERIAL	TYPE	SIZE
A	FEED INLET	SS316L	150# FLANGE	6.00
B	PRODUCT OUTLET	SS316L	150# FLANGE	6.00
C	BRINE INLET	SS316L	150# FLANGE	4.00
D	WASTE OUTLET	SS316L	150# FLANGE	4.00
E	INSTRUMENT AIR INLET	316	FPT	0.5

2. SHIPPING WEIGHT – 30,000 LBS (13,608 KG).
   SHIPPING WEIGHT WITH MEDIA – 60,000 LBS (27,211 KG).
3. OPERATING WEIGHT – 95,000 LBS (43,100 KG).
4. QUANTITY REQUIRED: 1 ASSEMBLY AS SHOWN.
5. PLUMBING RUN \ EQUIPMENT TABLE:

FIND NO.	PART NUMBER	QTY.	DESCRIPTION	U/M
1	3030555	1	CONTAINER,40',BWRO,PT	EA
2	3031213	3	VESSEL,MMF,84x53.5,CS,BM,SUBC,PAINT	EA
3	500203A–PP–03	6	PLMB,PVC,3.0",MEDIA OUTLET	EA
4	500208A–PP–01	1	PLMB,PVC,6.0",FEED	EA
5	500208A–PP–02	1	PLMB,CPVC,4.0",BACKWASH OUT	EA
6	500208A–PP–03	1	PLMB,PVC,4.0",BRINE IN	EA
7	500208A–PP–04	1	PLMB,316,2.0",AIR BLOWER	EA
8	500208A–PP–05	1	PLMB,PVC,6.0",PRODUCT	EA
9	500208A–PP–06	3	PLMB,316,1.0",VENT	EA
10	500208A–PP–07	1	ASSEMBLY,PH ANALYZER,M800	EA

6. ALL DIMENSIONS IN INCHES.
7. REFERENCE – PROCESS AND INSTRUMENTATION DIAGRAM : 500208A–AP–01
8. COMPRESSOR (PN:500208A–101) AND HEATER (PN:500208A–201) WILL BE LOCATED DEPENDING ON SITE CONDITIONS

REV	DESCRIPTION	ECO	DWN	APVD	DATE	CHKD
C	REVISED AS NOTED	–	SJ	HG	02AUG12	KW
B	REVISED AS NOTED	–	DJS	HG	09JUL12	JC
A	INITIAL RELEASE	–	BN	HG	11MAY12	JC

TOLERANCES UNLESS NOTED
DECIMALS: .X ± ; .XX ± 0.50 ; .XXX ± ; ANGLES ± 0.5 ; FRAC. ± 1/8"

DIMENSIONS IN INCHES
DO NOT SCALE

THIRD ANGLE

DRAWN BY	BN	DATE 03APR12
CHECKED BY	JC	DATE 16MAY12
APPROVED BY	KW	DATE 11MAY12
APPROVED BY	HG	DATE 11MAY12

GE Water & Process Technologies

THIS DRAWING, THE DESIGN AND THE PATENTS IT CONTAIN, IS THE PROPERTY OF GENERAL ELECTRIC COMPANY AND ITS AFFILIATES AND THE INFORMATION CONTAINED HEREIN IS PROPRIETARY INFORMATION WHICH IS NOT TO BE DISCLOSED TO ANYONE WITHOUT PRIOR WRITTEN CONSENT OF SAID COMPANY. THIS DRAWING IS TO BE USED EXCLUSIVELY FOR THE PURPOSES EXPRESSLY AUTHORIZED BY GENERAL ELECTRIC COMPANY AND ITS AFFILIATES THROUGH ITS OFFICERS AND QUALIFIED REPRESENTATIVES AND FOR NO OTHER PURPOSE. NEITHER THIS DRAWING, NOR ANY PORTION THEREOF, SHALL BE REPRODUCED WITHOUT THE PRIOR WRITTEN CONSENT OF SAID COMPANY, AND ANY SUCH REPRODUCTION SHALL BEAR THIS NOTICE.

CLIENT/JOB: GE MOBILE WATER AUTOFILTER 3X7

TITLE: GENERAL ARRANGEMENT SYS,PRETREATMENT,BWRO,CE

FILE: AUTOCAD

MATERIAL: 500208A–PG–02

SIZE: D

DRAWING NO.: 500208A–PG–02

REV: C

PROJECT: 500208

SCALE: 1:16

SHEET: 2 OF 3

P/N 1161667–00P01

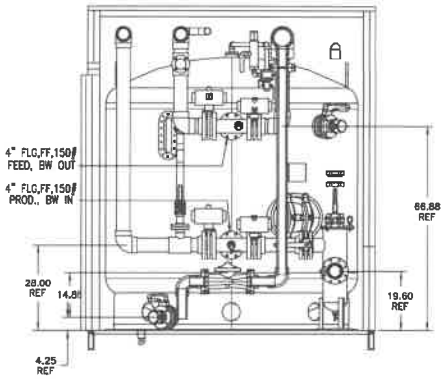

SECTION A–A
SCALE: 1:20

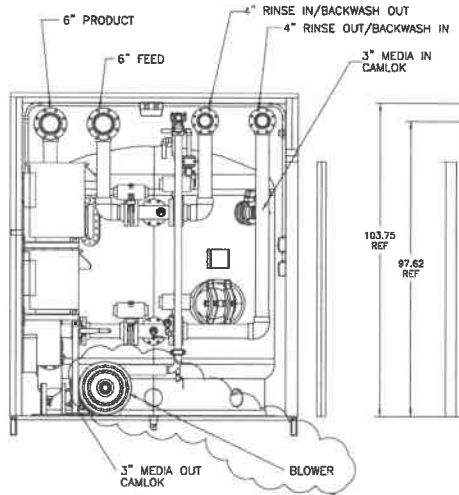

SECTION B–B
SCALE: 1:20

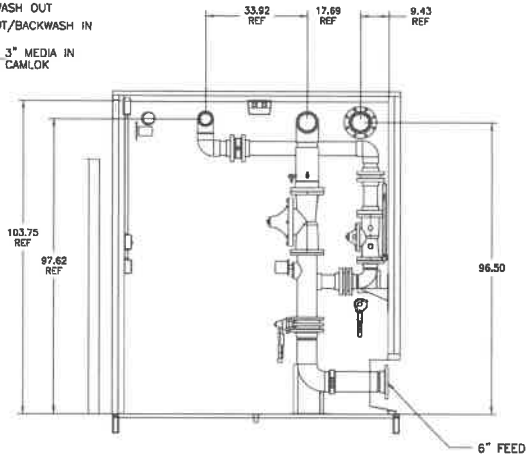

SECTION C–C
SCALE: 1:20

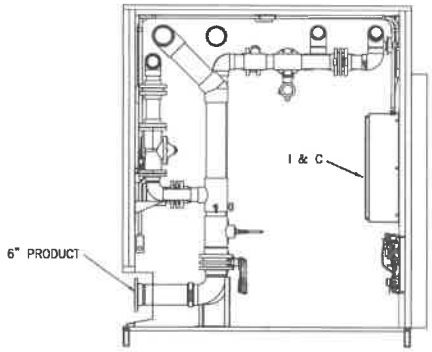

SECTION D–D
SCALE: 1:20

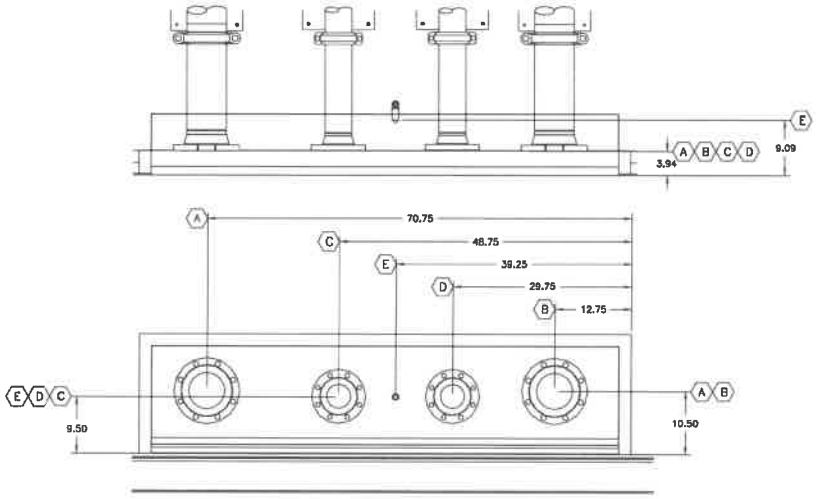

SECTION F–F
SCALE: 1:10

REV	DESCRIPTION	ECO	DWN	APVD	DATE	CHKD
C	REVISED AS NOTED	–	SJ	HG	02AUG12	KW
B	REVISED AS NOTED	–	DJS	HG	09JUL12	JC
A	INITIAL RELEASE	–	BN	HG	11MAY12	JC

TOLERANCES UNLESS NOTED
DECIMALS: X ± ; .XX ± 0.50 ; .XXX ± ; ANGLES ± 0.5 ; FRAC ±1/2"
DIMENSIONS IN INCHES DO NOT SCALE
THIRD ANGLE

DRAWN BY BN	DATE 03APR12	
CHECKED BY JC	DATE 16MAY12	
APPROVED BY KW	DATE 11MAY12	
APPROVED BY HG	DATE 11MAY12	

GE Water & Process Technologies
GLOBAL HEADQUARTERS : TREVOSE, PA USA +1-215-355-3300 www.gewaterprocess.com

THIS DRAWING, THE DESIGN AND THE PRODUCT IT DEPICTS IS THE PROPERTY OF GENERAL ELECTRIC COMPANY AND ITS AFFILIATES AND THE INFORMATION CONTAINED HEREIN IS PROPRIETARY INFORMATION WHICH IS NOT TO BE DISCLOSED TO ANYONE WITHOUT PRIOR WRITTEN CONSENT OF SAID COMPANY. THIS DRAWING IS TO BE USED EXCLUSIVELY FOR THE PURPOSES EXPRESSLY AUTHORIZED BY GENERAL ELECTRIC COMPANY AND ITS AFFILIATES THROUGH ITS OFFICERS AND QUALIFIED REPRESENTATIVES AND FOR NO OTHER PURPOSE. NEITHER THIS DRAWING NOR ANY PORTION THEREOF, SHALL BE REPRODUCED WITHOUT THE PRIOR WRITTEN CONSENT OF SAID COMPANY, AND ANY SUCH REPRODUCTION SHALL BEAR THIS NOTICE.

CLIENT/JOB: GE MOBILE WATER AUTOFILTER 3X7

TITLE: GENERAL ARRANGEMENT SYS,PRETREATMENT,BWRO,CE

FILE: AUTOCAD

MATERIAL: 500208A–PG–02

SIZE	DRAWING NO.	REV
D	500208A–PG–02	C
PROJECT	500208	
SCALE: AS NOTED	SHEET 3 OF 3	

P/N 1101502-000001

#20-033

20 033
Back Page

#20-035

Office of the Mayor

One JFK Memorial Drive
Braintree, Massachusetts 02184

Charles C. Kokoros
Mayor

781-794-8100

MEMORANDUM

To: Shannon Hume, President of the Council
Susan Cimino, Clerk of the Council
James Casey, Town Clerk

From: Charles C. Kokoros, Mayor CCK

Cc: Nicole I. Taub, Interim Chief of Staff and Director of Operations
Edward Spellman, Director of Municipal Finance
Robert Brinkmann, Deputy Assessor

RECEIVED TOWN CLERK
BRAINTREE, MA
2020 MAR 11 AM 11:11

Date: March 10, 2020

Re: Motion to Accept Massachusetts General Law c. 59 s. 5C ½ (additional real estate exemption)

President Hume, Clerk Casey and Clerk Cimino,

As discussed at a previous Town Council meeting, residents are currently eligible for statutory exemptions relative to their real estate tax obligations. In an effort to provide additional relief to these residents, I am proposing that the Town accept M.G.L. c. 59 s. 5C ½ and increase each exemption by 20%.

Local adoption of this provision would allow the Town to increase exemptions for our seniors, surviving spouses, veterans and blind persons by a uniform percentage for each exemption with certain restrictions. For example, the increase must be approved by the Council prior to July 1 and explicitly state the fiscal year the exemption percentage increase will first apply. The vote cannot be revoked for 3 years after acceptance. Also, taxpayers cannot pay less than they did the net real estate tax than the prior fiscal year and the taxable value cannot be less than 10% of its full and fair cash value after the exemptions. Finally, the additional exemption values are charged to the overlay account and are not eligible for reimbursement by the state. The FY20 balance of the fund is $1,201,000 and the account has a 5 year average balance of $1,123,600.

The following is a chart detailing the current exemption limits and the proposed increase valued at 20%:

Clause (MGL)	Description	FY19/FY20 Exemption Maximum	FY21 Proposed Exemption Maximum
17/17D	Senior (no income limit)	$175.00	$210.00
22	Veteran (10% plus)	$400.00	$480.00
22A	Veteran (loss of limb/eye)	$750.00	$900.00
22C	Veteran (100% plus housing adapt)	$1,500.00	$1,800.00
22E	Veteran (100%)	$1,000.00	$1,200.00
37A	Blind	$500.00	$600.00
41C	Senior (income limits)	$1,000.00	$1,200.00

Also, for your reference, I am attaching a list of exemptions currently available with the current exemption maximum and statutory restrictions (i.e. income and savings limits).

In addition to the exemptions detailed above, eligible seniors will maintain a deferral option under Clause 41A (Eligibility requirements include 65 or older and a maximum income of $40,000 (married or single)). Those currently receiving a 41A deferral benefit would not see an increase in their taxes and instead the additional costs would be deferred along with the existing tax obligations. The total amount of taxes become due upon death or sale and the deferral program provides a reduced interest rate when payment becomes due.
The Town will also continue to offer a Senior Citizen Municipal Service Program to assist homeowners over the age of 60 with real estate tax obligations while allowing the senior to contribute knowledge and experience to the various departments within the Town. Work hours are calculated at the minimum wage rate and accrued to equal the maximum abatement amount of $750. This credit is then applied to the resident's tax bill.

Accordingly, your review and approval of the following motion is requested:

Motion

MOTION: That the Town accept Massachusetts General Laws Chapter 59, Section 5C ½, which provides for an additional real estate exemption for taxpayers who are granted personal exemptions on their domiciles under Massachusetts General Laws Chapter 59, Section 5, including certain blind persons, veterans, surviving spouses and seniors, and provide an additional exemption up to twenty percent (20%) of the personal exemption, to be effective for exemptions granted for any fiscal year beginning on or after July 1, 2020.

EXEMPTION TYPES AND QUALIFICATIONS

CLAUSE 41C *(SENIOR OVER 65)*	$1,000.00	STATUS	MAXIMUM INCOME*	MAXIMUM SAVINGS(or less)*
		Married:	$34,392.77	$62,866.31
		Single:	$22,927.48	$45,721.33

CLAUSE 17 *(SENIOR OVER 65)*	$175.00	STATUS	MAXIMUM INCOME*	MAXIMUM SAVINGS(or less)*
		Married:	N/A	$47,791.72
		Single:	N/A	$47,791.72

CLAUSE 17D *(WIDOW/WIDOWER)*	$175.00		MAXIMUM INCOME	MAXIMUM SAVINGS(or less)*
		Single:	N/A	$47,791.72

***SEE BELOW FOR WHAT QUALIFIES FOR SAVINGS AND INCOME**

CLAUSE 37A ***(BLIND)***	**$500.00**	***Date of Determination must be before July 1st of Fiscal Year.** **Please provide Certificate of Blindness with registration date**
CLAUSE 22/22E ***(VETERANS)***	**$400.00 or $1,000.00**	***Amount varies according to % of Disability (minimum 10%)** ***Date of Determination must be before July 1st of current Fiscal Year.**

***SAVINGS INCLUDE:**
IRA'S, CD'S, 401K'S
BANK ACCOUNTS

FOR INCOME PLEASE SUBMIT COPIES OF:
MOST RECENT 1040 TAX FORM
SOCIAL SECURITY STATEMENTS
CURRENT BANK STATEMENT
PENSION/RETIREMENT STATEMENT
INCOME FROM REVERSE MORTGAGE

20 037

BRAINTREE HIGH SCHOOL MSBA Statement of Interest

Braintree Town Council MSBA Required Vote Language

March 17, 2020

Resolved: Having convened in an open meeting on March 17, 2020 prior to the SOI submission closing date, the Town Council of Braintree, in accordance with its charter, by-laws, and ordinances, has voted to authorize the Superintendent to submit to the Massachusetts School Building Authority the Statement of Interest Form dated March 17, 2020 for Braintree High School located at 128 Town Street, Braintree, Massachusetts, which describes and explains the following deficiencies and the priority category(s) for which an application may be submitted to the Massachusetts School Building Authority in the future: Priority #3: Prevention of the loss of accreditation; Priority #5: Replacement, renovation, or modernization of school facility systems, such as roofs, windows, boilers, heating and ventilation systems, to increase energy conservation and decrease energy related costs in a school facility; Priority #7: Replacement of or addition to obsolete buildings in order to provide for a full range of programs consistent with state and approved local requirements; and hereby further specifically acknowledges that by submitting this Statement of Interest Form, the Massachusetts School Building Authority in no way guarantees the acceptance or the approval of an application, the awarding of a grant or any other funding commitment from the Massachusetts School Building Authority, or commits the Town of Braintree or the Braintree School Department to filing an application for funding with the Massachusetts School Building Authority.

Massachusetts School Building Authority

Next Steps to Finalize Submission of your FY 2020 Statement of Interest

Thank you for submitting your FY 2020 Statement of Interest (SOI) to the MSBA electronically. **Please note, the District's submission is not yet complete**. The District is required to mail all required supporting documentation, which is described below.

VOTES: Each SOI must be submitted with the proper vote documentation. This means that (1) the required governing bodies have voted to submit each SOI, (2) the specific vote language required by the MSBA has been used, and (3) the District has submitted a record of the vote in the format required by the MSBA.

- **School Committee Vote:** Submittal of all SOIs must be approved by a vote of the School Committee.
  - For documentation of the vote of the School Committee, Minutes of the School Committee meeting at which the vote was taken must be submitted with the original signature of the Committee Chairperson. The Minutes must contain the actual text of the vote taken which should be substantially the same as the MSBA's SOI vote language.
- **Municipal Body Vote:** SOIs that are submitted by cities and towns must be approved by a vote of the appropriate municipal body (e.g., City Council/ Aldermen/Board of Selectmen) in addition to a vote of the School Committee.
  - Regional School Districts do not need to submit a vote of the municipal body.
  - For the vote of the municipal governing body, a copy of the text of the vote, which shall be substantially the same as the MSBA's SOI vote language, must be submitted with a certification of the City/Town Clerk that the vote was taken and duly recorded, and the date of the vote must be provided.

ADDITIONAL DOCUMENTATION FOR SOI PRIORITIES #1 AND #3: If a District selects Priority #1 and/or Priority #3, the District is required to submit additional documentation with its SOI.

- If a District selects Priority #1, Replacement or renovation of a building which is structurally unsound or otherwise in a condition seriously jeopardizing the health and safety of the school children, where no alternative exists, the MSBA requires a hard copy of the engineering or other report detailing the nature and severity of the problem and a written professional opinion of how imminent the system failure is likely to manifest itself. The District also must submit photographs of the problematic building area or system to the MSBA.
- If a District selects Priority #3, Prevention of a loss of accreditation, the SOI will not be considered complete unless and until a summary of the accreditation report focused on the deficiency as stated in this SOI is provided.

ADDITIONAL INFORMATION: In addition to the information required above, the District may also provide any reports, pictures, or other information they feel will give the MSBA a better understanding of the issues identified at a facility.

If you have any questions about the SOI process please contact the MSBA at 617-720-4466 or SOI@massschoolbuildings.org.

Massachusetts School Building Authority

School District Braintree

District Contact Frank Hackett TEL: (781) 380-0130

Name of School Braintree High

Submission Date 3/2/2020

SOI CERTIFICATION

To be eligible to submit a Statement of Interest (SOI), a district must certify the following:

- [x] The district hereby acknowledges and agrees that this SOI is NOT an application for funding and that submission of this SOI in no way commits the MSBA to accept an application, approve an application, provide a grant or any other type of funding, or places any other obligation on the MSBA.
- [x] The district hereby acknowledges that no district shall have any entitlement to funds from the MSBA, pursuant to M.G.L. c. 70B or the provisions of 963 CMR 2.00.
- [x] The district hereby acknowledges that the provisions of 963 CMR 2.00 shall apply to the district and all projects for which the district is seeking and/or receiving funds for any portion of a municipally-owned or regionally-owned school facility from the MSBA pursuant to M.G.L. c. 70B.
- [x] The district hereby acknowledges that this SOI is for one existing municipally-owned or regionally-owned public school facility in the district that is currently used or will be used to educate public PreK-12 students and that the facility for which the SOI is being submitted does not serve a solely early childhood or Pre-K student population.
- [x] After the district completes and submits this SOI electronically, the district must mail hard copies of the required documentation described under the "Vote" tab, on or before the deadline.
- [x] The district will schedule and hold a meeting at which the School Committee will vote, using the specific language contained in the "Vote" tab, to authorize the submission of this SOI. This is required for cities, towns, and regional school districts.
- [x] Prior to the submission of the SOI, the district will schedule and hold a meeting at which the City Council/Board of Aldermen or Board of Selectmen/equivalent governing body will vote, using the specific language contained in the "Vote" tab, to authorize the submission of this SOI. This is not required for regional school districts.
- [x] On or before the SOI deadline, the district will submit the minutes of the meeting at which the School Committee votes to authorize the Superintendent to submit this SOI. The District will use the MSBA's vote template and the vote will specifically reference the school and the priorities for which the SOI is being submitted. The minutes will be signed by the School Committee Chair. This is required for cities, towns, and regional school districts.
- [x] The district has arranged with the City/Town Clerk to certify the vote of the City Council/Board of Aldermen or Board of Selectmen/equivalent governing body to authorize the Superintendent to submit this SOI. The district will use the MSBA's vote template and submit the full text of this vote, which will specifically reference the school and the priorities for which the SOI is being submitted, to the MSBA on or before the SOI deadline. This is not required for regional school districts.
- [x] The district hereby acknowledges that this SOI submission will not be complete until the MSBA has received all of the required vote documentation in a format acceptable to the MSBA. If Priority 1 is selected, your SOI will not be considered complete unless and until you provide the required engineering (or other) report, a professional opinion regarding the problem, and photographs of the problematic area or system. If Priority 3 is selected, your SOI will not be considered complete unless and until you provide a summary of the accreditation report focused on the deficiency as stated in this SOI.

LOCAL CHIEF EXECUTIVE OFFICER/DISTRICT SUPERINTENDENT/SCHOOL COMMITTEE CHAIR (E.g., Mayor, Town Manager, Board of Selectmen)

Chief Executive Officer *	**School Committee Chair**	**Superintendent of Schools**
(signature)	(signature)	(signature)
Date	Date	Date

* Local chief executive officer: In a city or town with a manager form of government, the manager of the municipality; in other cities, the mayor; and in other towns, the board of selectmen unless, in a city or town, some other municipal office is designated to the chief executive office under the provisions of a local charter. Please note, in districts where the Superintendent is also the Local Chief Executive Officer, it is required for the same person to sign the Statement of Interest Certifications twice.

Massachusetts School Building Authority

School District Braintree

District Contact Frank Hackett TEL: (781) 380-0130

Name of School Braintree High

Submission Date 3/2/2020

Note

The following Priorities have been included in the Statement of Interest:

1. ☐ Replacement or renovation of a building which is structurally unsound or otherwise in a condition seriously jeopardizing the health and safety of school children, where no alternative exists.
2. ☐ Elimination of existing severe overcrowding.
3. ☑ Prevention of the loss of accreditation.
4. ☐ Prevention of severe overcrowding expected to result from increased enrollments.
5. ☑ Replacement, renovation or modernization of school facility systems, such as roofs, windows, boilers, heating and ventilation systems, to increase energy conservation and decrease energy related costs in a school facility.
6. ☐ Short term enrollment growth.
7. ☑ Replacement of or addition to obsolete buildings in order to provide for a full range of programs consistent with state and approved local requirements.
8. ☐ Transition from court-ordered and approved racial balance school districts to walk-to, so-called, or other school districts.

SOI Vote Requirement

☑ I acknowledge that I have reviewed the MSBA's vote requirements for submitting an SOI which are set forth in the Vote Tab of this SOI. I understand that the MSBA requires votes from specific parties/governing bodies, in a specific format using the language provided by the MSBA. Further, I understand that the MSBA requires certified and signed vote documentation to be submitted with the SOI. I acknowledge that my SOI will not be considered complete and, therefore, will not be reviewed by the MSBA unless the required accompanying vote documentation is submitted to the satisfaction of the MSBA.

SOI Program: Core
Potential Project Scope: Renovation\ Addition
Is this a Potential Consolidation? No

Is this SOI the District Priority SOI? No
School name of the District Priority SOI: South Middle School

Is this part of a larger facilities plan? Yes
If "YES", please provide the following:
Facilities Plan Date: 5/14/2014
Planning Firm: Habeeb & Associates

Please provide a brief summary of the plan including its goals and how the school facility that is the subject of this SOI fits into that plan:

The Town of Braintree commissioned Habeeb & Associates in 2014 to provide a comprehensive study of our schools, focusing primarily on our 6 elementary schools, which are experiencing significant space constraints due to increasing enrollments and the expansion of specialized in-district programs. The study considered elementary facility renovations and additions to accommodate existing and projected enrollment growth. Recommendations from the study were built around the core value of maintaining neighborhood elementary schools, as well as keeping the existing structure of two middle schools and Braintree High School (BHS) in place. The Habeeb study brought forward earlier planning considerations that had been explored by the Town, with their final report detailing five main options, each with multiple subsets that allowed for a range of combinations involving renovations and various additions to the existing elementary schools. In general, the report was not well received by the school-community. While Habeeb determined that some of the option subsets failed to provide long-range solutions, several were deemed to meet the demands of current and projected enrollment (building additions), as well as renovations significant enough to upgrade and modernize existing facilities for future use. One option recommended the construction of 4 new K-5 elementary schools that would allow for the closure of all 6 existing facilities. After conducting an extensive review of the Habeeb study and enrollment projections in 2015, the BPS began to explore the feasibility of moving from the existing model of 2 middle schools that serve grades 6-8 to a configuration of grades 5-8 at both schools. This solution, which has been supported by the MSBA at both East Middle School (currently under construction with a targeted Fall 2020 completion) and South Middle School (Detailed Design was submitted in January, 2020), will allow our existing elementary schools to gain over 20 classrooms system-wide that are currently being used by grade 5 students, thus eliminating the need to build additions to those schools. BRAINTREE HIGH SCHOOL: While BHS was not part of the Habeeb 2014 study, it was added to our PreK-12 Master Plan in the winter of 2016 for the reasons detailed in this SOI. Beyond the submission of the SOI, our Master Plan includes a commitment to continue capital improvements at BHS, as evidenced by recent and ongoing upgrades, including a district-wide (all elementary schools & BHS) $10mil ESCO project. This project also included a $200,000/year commitment of annual capital funds from the Town to provide much-needed upgrades that will not generate enough energy savings to fit into the ESCO funding payback model. At BHS, the ESCO investment: (1) replaced 60% of our transformers; (2) provided HVAC system upgrades: (3) installed all new lighting; (4) provided new ceilings in all core areas, and (4) implemented multiple water and other energy conservation measures. The timing of this investment is unfortunate given the submission of this SOI; however, we were not able to wait given the facility needs. BHS was built for a 9-12 high school population of 3,500 students in 1972. As would be expected after 48 years of use, and as described in this SOI, many classrooms are no longer used for the types of courses for which they were designed. None of these facility challenges are surprising considering the age of the building; however, the funds required to conduct the type of full-scale renovations needed to both update existing systems and infrastructure, as well as create spaces that promote 21st century teaching and learning, are beyond the capacity of year-to-year operational budgets and available local capital funds. For these reasons, the most critical action step for BHS within the BPS Master Facilities Plan is the submission of this SOI to the MSBA.

Please provide the current student to teacher ratios at the school facility that is the subject of this SOI: 15 students per teacher

Please provide the originally planned student to teacher ratios at the school facility that is the subject of this SOI: 15 students per teacher

Does the District have a Master Educational Plan that includes facility goals for this building and all school buildings in District? Yes

If "YES", please provide the author and date of the District's Master Educational Plan.

The BPS continues to finalize a Master Educational Plan that provides for the reconfiguration of our six (6) elementary schools from grade 1-5/K-5 and one Kindergarten Center (MSKC), to six (6) grade1-4/ K-4 schools, MSKC, two (2) 5-8 middle schools, and BHS (9-12). The plan includes multiple programmatic and instructional

initiatives, and involves several district and school-based groups representing a wide-range of stakeholders. Oversight of the plan rests with our district leadership team.

Is there overcrowding at the school facility? No

If "YES", please describe in detail, including specific examples of the overcrowding.

Has the district had any recent teacher layoffs or reductions? No

If "YES", how many teaching positions were affected? 0
At which schools in the district?
Please describe the types of teacher positions that were eliminated (e.g., art, math, science, physical education, etc.).

Has the district had any recent staff layoffs or reductions? No

If "YES", how many staff positions were affected? 0
At which schools in the district?
Please describe the types of staff positions that were eliminated (e.g., guidance, administrative, maintenance, etc.).

Please provide a description of the program modifications as a consequence of these teacher and/or staff reductions, including the impact on district class sizes and curriculum.

Does not apply.

Please provide a description of the local budget approval process for a potential capital project with theMSBA. Include schedule information (i.e. Town Meeting dates, city council/town council meetings dates, regional school committee meeting dates). Provide, if applicable, the District's most recent budget approval process that resulted in a budget reduction and the impact of the reduction to the school district (staff reductions, discontinued programs, consolidation of facilities).

The school budget has been developed to include forecasting for future years to support the implementation of our Master Plan. The process begins in the fall with individual school and department planning, culminating with the district-wide leadership team that provides several tiers to the School Committee's Finance & Operations Subcommittee. This subcommittee begins making its recommendation to the full School Committee in early March. A public hearing is held late March/early April, with a final recommendation being presented to the Mayor in April. The Mayor then provides his recommendations for all town department budgets to the Town Council in May. The Council may lower the Mayor's recommended budget, but it is not able to increase it. The School Department has been provided multiple, consecutive years of budget increases, and has not experienced staff reductions due to fiscal constraints.

General Description

BRIEF BUILDING HISTORY: Please provide a detailed description of when the original building was built, and the date(s) and project scopes(s) of any additions and renovations (maximum of 5000 characters).

Braintree High School was constructed in 1972 and is a poured cement building. There have been no additions. Structural repairs were made in 1997, new boilers were installed in 1998 and converted to gas in 1999, the auditorium was upgraded in 2009, and the gymnasium was updated in 2015 with new bleachers, painting, and updated equipment. Solar panels were installed on the roof in 2016. BHS is a significant part of a $10mil ESCO project that began in 2018, including (1) replaced 60% of our transformers; (2) provided HVAC system upgrades: (3) installed all new lighting; (4) provided new ceilings in all core areas, and (5) implemented multiple water and other energy conservation measures. Along with several renovations of existing bathrooms, large public restrooms were added during the summer of 2018 to service the gymnasium and cafeteria.

TOTAL BUILDING SQUARE FOOTAGE: Please provide the original building square footage PLUS the square footage of any additions.

380847

SITE DESCRIPTION: Please provide a detailed description of the current site and any known existing conditions that would impact a potential project at the site. Please note whether there are any other buildings, public or private, that share this current site with the school facility. What is the use(s) of this building(s)? (maximum of 5000 characters).

Braintree High School is located on a 46 acre site with no known site limitations. There are no other buildings on the site at this time, but the town has started construction of a rink/pool facility.

ADDRESS OF FACILITY: Please type address, including number, street name and city/town, if available, or describe the location of the site. (Maximum of 300 characters)

128 Town Street
Braintree MA 02184

BUILDING ENVELOPE: Please provide a detailed description of the building envelope, types of construction materials used, and any known problems or existing conditions (maximum of 5000 characters).

Braintree High School is a concrete building constructed in 1972. The windows and doors are original to the building, have little insulating value, and have exceeded their useful life: they are in need of replacement. The roof was replaced in sections between 2004 and 2008, and was deemed to be in good condition prior to the installation of solar panels in 2016. Water penetration is experienced around windows and penthouse enclosures on the roof in wind-driven rain. There are no known structural problems or concerns.

Has there been a Major Repair or Replacement of the EXTERIOR WALLS? YES
Year of Last Major Repair or Replacement:(YYYY) 1998
Description of Last Major Repair or Replacement:
The exterior walls were waterproofed in 1998 and repaired and painted in 2013.

Roof Section A
Is the District seeking replacement of the Roof Section? NO
Area of Section (square feet) 148838
Type of ROOF (e.g., PVC, EPDM, Shingle, Slate, Tar & Gravel, Other (please describe)
EPDM
Age of Section (number of years since the Roof was installed or replaced) 15
Description of repairs, if applicable, in the last three years. Include year of repair:

The roof was redone in small sections between 2004 and 2008. It is considered to be in good overall condition.

Window Section A
Is the District seeking replacement of the Windows Section? YES
Windows in Section (count) 125
Type of WINDOWS (e.g., Single Pane, Double Pane, Other (please describe))
Double pane original to the building
Age of Section (number of years since the Windows were installed or replaced) 48
Description of repairs, if applicable, in the last three years. Include year of repair:
The windows are original to the building and are past useful life.

MECHANICAL and ELECTRICAL SYSTEMS: Please provide a detailed description of the current mechanical and electrical systems and any known problems or existing conditions (maximum of 5000 characters).

Five (5) Aero gas fired hot water boilers were installed in 2009 and are in good condition. There are 2 Patterson Kelly indirect water to water heat exchangers and storage tanks for domestic hot water. The system is original to the building and is in fair condition. A pneumatic control system exists throughout the building and is in poor condition. The piping system is original to the building and is in poor condition. Leaks are common and the system is frequently under repair. The building is equipped with 11 different air conditioning systems for core spaces. Condensers are roof mounted and in fair condition. Classroom unit ventilators use hot water coils and pneumatic controls and are in fair/poor condition: they do not provide cooling and require frequent and constant maintenance. The electrical system is original to the building and does not meet our needs.

Boiler Section 1
Is the District seeking replacement of the Boiler? YES
Is there more than one boiler room in the School? NO
What percentage of the School is heated by the Boiler? 100
Type of heating fuel (e.g., Heating Oil, Natural Gas, Propane, Other)
5 2009 Aero boilers that are natural gas fired.
Age of Boiler (number of years since the Boiler was installed or replaced) 11
Description of repairs, if applicable, in the last three years. Include year of repair:
Winter of 2018 we required an emergency waiver to repair 2 of the boilers that went offline during the January cold snap. The blowers and controllers were replaced.

Has there been a Major Repair or Replacement of the HVAC SYSTEM? YES
Year of Last Major Repair or Replacement:(YYYY) 2015
Description of Last Major Repair or Replacement:
7 of the rooftop air conditioner condenser units were replaced between 1997 and 2015.

Has there been a Major Repair or Replacement of the ELECTRICAL SERVICES AND DISTRIBUTION SYSTEM? NO
Year of Last Major Repair or Replacement:(YYYY) 1972
Description of Last Major Repair or Replacement:
All electric equipment is original to the building with the exception of the replacement of 60% of the transformers, which were upgraded as part of the 2018 ESCO project.

BUILDING INTERIOR: Please provide a detailed description of the current building interior including a description of the flooring systems, finishes, ceilings, lighting, etc. (maximum of 5000 characters).

BHS was built for a 9-12 high school population of 3,500 students in 1972 and the interior is largely in as-built condition. Many classrooms are no longer used for the types of courses for which they were designed. The walls are concrete block and are painted. Tiles are generally original to the building and range from fair to good condition. Various sections of the building have differing color schemes, and rooms colors are inconsistent.

The flooring is original vinyl tile and many areas include tiles that are broken and popping. Years of wax build-up has also discolored much of the flooring tile and several places have broken tiles that are sealed under the wax. There is some ceramic tile in the main lobbies that is often slippery and a hazard during the wet weather. The building has limited areas where carpeting is in use. Carpeting has been replaced in some areas, but much is still original. The media center has carpet that has differing patterns where newer carpet abuts original carpet. An ESCO project that began in the summer of 2018 acccomplished the following: (1) replaced 60% of our transformers; (2) provided HVAC system upgrades: (3) installed all new lighting; (4) provided new ceilings in all core areas, and (5) implemented multiple water and other energy conservation measures.

PROGRAMS and OPERATIONS: Please provide a detailed description of the current grade structure and programs offered and indicate whether there are program components that cannot be offered due to facility constraints, operational constraints, etc. (maximum of 5000 characters).

Braintree High School (BHS) is a 9-12 academic institution that provides a variety of programs and academic opportunities. It also houses our PreK program, which brings total enrollment to approximately 1850 students. High levels of achievement are seen across all subgroups of our student population, which is becoming increasingly diverse. BHS was named by Newsweek Magazine as one of the top 500 high schools in the country, reaching number 15 out of over 200 high schools in the Commonwealth of Massachusetts. BHS graduates are well prepared for the world they enter, with generally 85-90% attending two (2) or four (4) year colleges, and another 2.7% attending other post-secondary schools, 1-4% enlist in the military, and roughly 5-10% join the workforce. The school is organized into three (3) houses, each supported by an administrator. The core curriculum includes offerings in English language arts (ELA), mathematics, social studies, science, and world languages. Among our core offerings are 21 Advanced Placement (AP) courses that are heavily enrolled. Students also take a physical education course each of their four years, and a required health class during their freshmen year. Electives are offered in core curriculum areas, as well as in music, health, and art. BHS supports and encourages students to take responsibility for their own learning. Teachers effectively communicate expectations to students, and support these expectations through after-school assistance, Google Classroom interactive sites, and consistent grading feedback through an online portal. Special education services are provided both in the classroom and in separate settings, and special education teachers work directly with general education teachers to provide coherent and relevant supports. The school offers several programs that service both general and special education students. The Alternative Program serves students who struggle in the mainstream environment, while a Career Exploration program assists more involved students with transitions beyond high school. Our STRIVES program supports students on the Autism Spectrum and Project PROVE educates a student population with more complex cognitive challenges. The Braintree school-community core value that threads throughout all that we do at BHS, and one that has become the hallmark of our programs, is inclusion: our students move throughout BHS as a community of learners. This value, and the programs above, is also reflected by a 5% decline in suspension rates recently cited as an example for other high schools to consider in working with students who present behavioral challenges. Finally, to ensure that all students have opportunities to explore their talents and interests, BHS offers over 40 extra-curricular activities for students and a complete, and highly successful, menu of interscholastic sports offerings. The aged facility challenges our ability to implement 21st century learning standards. Built in 1972, when 49% of students went on to post-secondary institutions (National Center for Education Statistics), the educational mission reflected by the design was dramatically different than what is both expected, and required, of students today. As a result, there are program components that cannot be fully implemented, or implemented with fidelity, particularly related to STEAM curricula (Science, Technology, Engineering, Art, Mathematics). Large vocational spaces that were part of the original building construction in 1972 are obsolete and no longer utilized for educational programming. Science labs are outdated, and while utilized effectively by talented staff, they are in need of significant upgrades. Dedicated, and purposefully designed technology and engineering classrooms are non-existent, forcing programs to be developed in ways that accommodate for space and infrastructure constraints. Visual and performing art rooms are large but outdated, which impacts both the types of programs the school can offer, as well as its ability to reach instructional goals. Finally, the layout of the building, including classroom and core space adjacencies, creates substantial barriers to curriculum and instructional integration.

EDUCATIONAL SPACES: Please provide a detailed description of the Educational Spaces within the facility, a description of the number and sizes (in square feet) of classrooms, a description of science rooms/labs

including ages and most recent updates, a description of the cafeteria, gym and/or auditorium and a description of the media center/library (maximum of 5000 characters).

Braintree High School (BHS) was constructed in 1972 and consists of 131 classrooms of approximately 600-700sf each, far below the MSBA standard. In addition, there is an expansive media center space (10,000sf), an undersized auditorium, a large cafeteria, and multiple physical education and athletic spaces, including a gymnasium. The media center space is inappropriately configured and inefficient for the delivery of effective programming. While large, it was designed for a different era therefore limiting its function as a space that promotes and supports 21st century learning. The auditorium, while undersized, was renovated in 2009 and includes new seating and a sound system. The gymnasium was updated in 2015 with new bleachers, painting, and updated equipment; however, the locker rooms and supporting spaces are largely original to the building and in need of renovation. The cafeteria is approximately 10,000sf, original to the building, and has not received any significant renovation. The kitchen is located one floor down from the cafeteria, with food being transported up to the serving line. There are 17 science rooms in the building, ranging from approximately 1,000 – 1,400 square feet. The science labs are original and need significant renovation. The school also has several large art rooms that include cabinetry and sinks that are antiquated and inadequate. Several rooms originally designed for programs in home economics have been re-purposed, but retain out-of-date storage cabinets, stoves, and sinks. These spaces are in need of updates to ensure that the appropriate resources are available for the courses actually being taught in the rooms.

CAPACITY and UTILIZATION: Please provide the original design capacity and a detailed description of the current capacity and utilization of the school facility. If the school is overcrowded, please describe steps taken by the administration to address capacity issues. Please also describe in detail any spaces that have been converted from their intended use to be used as classroom space (maximum of 5000 characters).

Braintree High School (BHS) was designed for a 9-12 high school population of 3,500 students in 1972. The decline in population over the last 45+ years, as well as changes in educational programming, has seen the repurposing of many of the interior spaces. BHS has housed Kindergarten classrooms, and part of one academic wing currently serves as our integrated Pre-School. BHS operates many specialized programs to support the needs of our most challenged and vulnerable students within the school, and these programs occupy most of the first-floor spaces. BHS faculty and staff, with the support of parents and the community, provide exceptional academic and social-emotional supports to all students, and we are dedicated to finding ways to meet the needs of all our students, including those who may otherwise be in out-of-district placements. The result of this fundamental commitment, which is a price that we happily accept, is that the current population of approximately 1,745 students fills the remaining classroom spaces, and fully utilizes the common learning spaces. As would be expected after 48 years of use, many classrooms are no longer used for the types of courses for which they were designed. The STRIVES Program, a special education service, occupies a classroom space outfitted with equipment for teaching electronics from 1972. The equipment was too large to be removed, so as a result it still occupies the space and existing courses find ways to work around it. Former home economics spaces still retain the original cabinets, stoves, and sinks, but are now serving as art and health classrooms. Teachers have found ways to accommodate these impediments, and because they are skilled and talented professionals they effectively instruct classes that are filled with obsolete equipment and structures. Other classroom spaces have been redesigned over the years to better suit the needs of the programs they house, including the construction of walls to divide rooms originally designed for full classrooms to accommodate specialized programs and services.

In typical classrooms, the demand for power for devices has far exceeded the wiring installed in 1972. The limits of this infrastructure have created significant obstacles and barriers to implementation of technology and a 21st century learning environment. In most classrooms, there are only two outlets, which has most recently proven to be a substantial challenge to our efforts to implement our 1:1 technology initiative. Open-space classrooms with operating accordion walls were repurposed into standard classroom spaces; unfortunately, the replacement walls are not soundproof and ambient noise from adjacent classrooms in these areas are problematic for learning, especially for those students with learning challenges and environmental sensitivities.

Although BHS utilizes all available spaces for instruction and programs, the quality and comfort of those spaces for learning is often inadequate. Inconsistent heating and cooling, plumbing that has passed its useful life, routine

failure of originally installed equipment, and worn conditions resulting from 48 years of heavy use by students, staff and the community, all create teaching and learning hurdles for staff and students. While the building is structurally sound thanks to solid construction and investments made over the years in roofs, boilers, and other upgrades, significant challenges remain: original windows, combined with expansive core spaces such as the main foyers, cafeteria and media center are difficult to heat and cool during extreme temperatures; some bathrooms that are undersized and in need of renovation; locker rooms that are oversized and also in need of significant renovation, and the previously detailed classroom and learning space issues, that are original to the building. None of these facility challenges are surprising considering the age building of the building; however, while capital improvements have been done over the years, the funds now required to conduct the type of full scale renovations needed to both update existing, and in many cases original, systems and infrastructure, as well as to create spaces that promote 21st century teaching and learning, are beyond the capacity of year-to-year operational budgets and available local capital funds. This fact is, of course, the impetus for our submission for a Core Program with the MSBA.

MAINTENANCE and CAPITAL REPAIR: Please provide a detailed description of the district's current maintenance practices, its capital repair program, and the maintenance program in place at the facility that is the subject of this SOI. Please include specific examples of capital repair projects undertaken in the past, including any override or debt exclusion votes that were necessary (maximum of 5000 characters).

The district receives $1,000,000 in capital each year from the Mayor and Town Council to address highest priority needs. We also employ a full time electrician, plumber, painter, carpenter and two general laborers for work that can be addressed without outside contractors. Our operational budget for custodial and maintenance is almost $3,000,000 per year. All buildings, with the exception of our two middle schools, are currently being evaluated as part our SchoolDude Facilities Management System upgrade. The following work was done at the high school in the past few years:
Renovate 7 Bathrooms 2015
Replace gymnasium bleachers 2015
Refurbish gymnasium floor 2015
Repave front loop driveway and part of access road 2015
Replaced roof top air conditioning unit 2015
Solar PV on roof 2016
Replaced carpeting in media center offices 2016
Installed rolling steel door to loading dock 2016
Repave back loop driveway and part of access road 2016
Installed new kilns 2016
Built new pre-school bathroom 2016
Installed new walk-in freezer 2016
New ceiling and lights (1st floor near elevators and locker area) 2016
Replaced carpet in both main lobbies 2016
Replaced section of lockers 2017
2018-2019: 1) replaced 60% of our transformers; (2) provided HVAC system upgrades: (3) installed all new lighting; (4) provided new ceilings in all core areas, (5) implemented multiple water and other energy conservation measures; (6) Renovation of 2 public restrooms, (7) construction of 2 large public rest rooms to service the gymnasium and cafeteria, (8) repaving of back parking lot & installation of ADA compliant curbing and access, (9) Replacement of security gate, and (10) build-out of a cafe for a special educaton life skills program.

Priority 3

Question 1: Please provide a detailed description of the "facility-related" issues that are threatening accreditation. Please include in this description details related to the program or facility resources (i.e. Media Center/Library, Science Rooms/Labs, general classroom space, etc.) whose condition or state directly threatens the facility's accreditation status.

In October 2017, New England Association of Schools and Colleges (NEASC) visited Braintree High School for our decennial review. Over the course of four days, the visiting team did an extensive review of all aspects of Braintree High School including our facility. In their formal written review, the NEASC committee voted to place the school on warning status for the standard on "Community Resources for Learning." Many aspects of the school facility led to the committee putting BHS on warning status, and the report noted that only 34.5 percent of staff agree that the site and plant have a positive impact on programs and services. The committee referenced infrastructure deficiencies including the following:

- General classroom comfort: inconsistent operation of the heating, ventilation, and air-conditioning (HVAC) system (some mitigation realized with the ESCO project, but BHS remains on pneumatic controls and classroom univents & air exchangers are original to the building);

-Safety and functionality of science labs for 21st century learning;

- Undersized classroom & lab spaces;

- Classrooms on interior walls - no windows;

-Bathrooms that are undersized, particularly for the auditorium;

Priority 3

Question 2: Please describe the measures the district has taken to mitigate the problem(s) described above.

Both Braintree High School and the Braintree Public Schools have taken many steps to mitigate some of the problems detailed above, including: (1) replaced 60% of our transformers; (2) provided HVAC system upgrades: (3) installed all new lighting; (4) provided new ceilings in all core areas, (5) implemented multiple water and other energy conservation measures; (6) renovation of 2 public restrooms, and (7) construction of 2 large public rest rooms to service the gymnasium and cafeteria.

The superintendent, headmaster, and science director met with the Braintree Fire Department and addressed all safety concerns in science labs including repair of broken fume hoods, installation of new eye wash stations, and stocking fire blankets. The science director engaged a representative from the Laboratory Safety Institute to review the current facility and to provide suggestions on how to improve chemical and lab safety measures, and all chemicals have been inventoried through an online system. Unused and expired chemicals were professional removed from the building. These incremental steps have moved the school forward with respect to addressing the safety aspects of the NEASC report; however, they do not address the larger functionality questions presented. Steps to counter the deficiencies such as lab functionality would require a more complete renovation of the spaces and a much larger financial investment than is possible under the current operating budget.

Priority 3

Question 3: Please provide a detailed explanation of the impact of the problem described in this priority on your district's educational program. Please include specific examples of how the problem prevents the district from delivering the educational program it is required to deliver and how students and/or teachers are directly affected by the problem(s) identified.

While the NEASC committee highlighted significant strengths in the area of curriculum, instruction, assessment, and school culture, they explicitly stated how many of the problems described above have a negative impact upon delivery of a quality educational program. These noted difficulties are also observed by staff and students on an ongoing basis, which was documented in the NEASC report. Below is a summary listing of deficiencies:

During heavy, wind-driven rainstorms, leaks typically occur at various locations throughout the building. This water infiltration generally occurs through rooftop unit penthouse structures. In these conditions, leaks develop in classrooms, and school administrators relocate students and teachers in the middle of the school day, which interrupts learning and disrupts the general organization of the school. Large windows in art classrooms experience similar issues.

The aged HVAC control system, and original room univents, provide inconsistent heating and cooling, resulting in inconsistent temperatures, which impacts the learning environment. Classroom univents are in frequent need of repair. During the colder months, delays in getting contractors in to repair univents result in those classrooms being moved.

The NEASC committee pointed out that the science labs are not suitable to deliver a 21st century learning experience for students because the rooms are undersized, sinks are in disrepair or undersized, and vent hoods function inconsistently. The fixtures in these spaces generally original to the building and beyond their useful life. The insufficient spaces challenge our ability to provide meaningful lab experiences to students and are often replaced with demonstration labs rather than student-participatory experiments. The structure of the spaces reflects the educational pedagogy of the 1970's and are in need of reconfiguration to best deliver 21st century science instruction to students.

Finally, the current electrical infrastructure within the building significantly impacts teaching and learning. The average classroom does not have the circuitry required to support common uses of electrical devices. As a result, we are limited in the deployment of devices in most of our classrooms due to insufficient wiring.

Please also provide the following:

Name of accrediting entity (maximum of 100 characters):
New England Association of Schools and Colleges (NEASC)

Current Accreditation Status: Please provide appropriate number as 1=Passed, 2=Probation, 3=Warning, 4=Lost: 3

If "WARNING", indicate the date accreditation may be switched to Probation or lost:

If "PROBATION", indicate the date accreditation may be lost:

Please provide the date of the first accreditation visit that resulted in your current accreditation status.:

Please provide the date of the follow-up accreditation visit:

Are facility-related issues related to Media Center/Library? If yes, please describe in detail in Question 1 below.:
NO

Are facility-related issues related to Science Rooms/Labs? If yes, please describe in detail in Question 1 below.:
YES

Are facility-related issues related to general classroom spaces? If yes, please describe in detail in Question 1 below.: YES

Are facility-related issues related to SPED? If yes, please describe in detail in Question 1 below.: NO

Are facility-related issues related to support spaces? If yes, please describe in detail in Question 1 below.:
NO

Are facility-related issues related to "Other"? If yes, please identify the other area below and describe in detail in Question 1 below.: YES

Please describe (maximum of 100 characters).:

NEASC: Building does not support high-quality programs & services.

HVAC, electrical & plumbing

Priority 5

Question 1: Please provide a detailed description of the issues surrounding the school facility systems (e.g., roof, windows, boilers, HVAC system, and/or electrical service and distribution system) that you are indicating require repair or replacement. Please describe all deficiencies to all systems in sufficient detail to explain the problem.

The HVAC control system at BHS is aged and in various states of disrepair. The controls for two of the five boilers in the basement of BHS required emergency repair recently to be brought back online during an historic cold snap. There are various and frequent problems with the HVAC system as a whole. Classroom univents make loud noises, need frequent repair, and often create inconsistent temperatures within classrooms.

Plumbing issues are a regular occurrence in bathrooms, art classrooms, and science labs. The school district employs a plumber, who spends a preponderance of time working at the high school on issues related to clogs, broken fixtures, broken drain pipes, leaking pipes, and faulty shut-off valves. Sinks in both science and art spaces are often in need of repair and therefore unreliable for instruction. The sinks themselves are undersized are inappropriate for the current applications for which they could be used. Bathroom sink and toilet plumbing issues are a frequent occurrence and lead to bathrooms being shut down while work to repair the damage is conducted.

Windows are original to the building and require regular maintenance attention. In several art classrooms, large windows experience water infiltration in wind-driven rain storms. Large spaces, including the media center, cafeteria and gymnasium are impacted when outdoor temperatures are extreme due to their low insulation value.

Bathrooms at Braintree High School are original, with repairs and limited upgrades being done over time. The bathrooms that service the auditorium, cafeteria and gymnasium are undersized by today’s standards, and heavy use during events creates demands on custodial workers. Due in part to the age of the bathrooms, the appearance of cleanliness is impacted. Non-uniform/patchwork repairs over the years have resulted in a mismatch of tile, fixtures, and partitions in many bathrooms. In addition, toilets and sinks are sometimes taken offline for use for repair.

Priority 5

Question 2: Please describe the measures the district has already taken to mitigate the problem/issues described in Question 1 above.

The town recently implemented an ESCO project to address the building and district's needs in the area of energy conservation. Specifically, at BHS, the project has improved HVAC through new controls and an energy management system, and lighting issues financed through the cost savings such improvements will provide to the district in efficiencies. Lighting was replaced with LED fixtures, which provide cost savings to the district and updated HVAC controls improve the effectiveness in energy usage. All bathroom china was replaced, and new ceiling tiles have been installed throughout the building.

Over the years, the steps taken to mitigate problems identified have been repair activities by our school custodians or district maintenance staff, with some contracted work. The head custodian has done ample work adjusting, by hand, temperature controls on rooftop units to ameliorate heating and cooling issues. Custodians are called on a routine basis to attempt to repair loud or broken classroom univents.

Plumbing issues are addressed by our district's plumber who prioritizes and addresses concerns upon notification of a leak or blockage. The work volume is such that many issues take an inordinate amount of time to be resolved, as the aged nature of the system requires locating older parts and/or improvising solutions given the inability to find necessary materials. The interim headmaster's proposed FY18 budget to the superintendent included the request for a renovation of the gymnasium bathrooms, which were prioritized in that year's capital budget.

Priority 5

Question 3: Please provide a detailed explanation of the impact of the problem/issues described in Question 1 above on your district's educational program. Please include specific examples of how the problem prevents the district from delivering the educational program it is required to deliver and how students and/or teachers are directly affected by the problem identified.

As described in other sections of this document, the heating and cooling problems caused by an inconsistent HVAC system have created uncomfortable classrooms, where students and teachers can be distracted from learning. When weather conditions are extreme, classrooms are sometimes moved to other parts of the building during the day, which disrupts the schedule, limits the resources available to teachers, and is distracting to students. While the ESCO project has helped to mitigate this issue some, the HVAC system still utilized pneumatic controls, and the air exchange system is original to the building.

The functionality and usability of sinks in both science and art classrooms prevent and discourage students and teachers from being able to use them in a way to effectively support curriculum projects. Lessons become limited to those that do not include the use of these resources and certain labs/projects are removed from the curriculum. Aged univents frequently make loud rattling sounds, which impacts learning. The service being provided to keep these units operational often occurs during class time, which can be an additional distraction to the teachers and students in the room.

Priority 5

Question 4: Please describe how addressing the school facility systems you identified in Question 1 above will extend the useful life of the facility that is the subject of this SOI and how it will improve your district's educational program.

Addressing the facility problems will help to extend the useful life of our building. An efficiently functioning HVAC system would provide a more comfortable atmosphere in which students could engage their education. Properly operating univents would cause fewer distractions, and would help students and teachers focus on learning rather than their environment or comfort. Proper heating and cooling would also provide a better environment for all people working within the building and would greatly improve morale for all stakeholders.

Renovating and upgrading sinks in classroom spaces will allow for full implementation of curriculum that requires these resources, specifically while conducting science labs and working on art projects. Renovating bathrooms will truly extend the useful life of the facility, as these spaces would then be appropriate for various night, weekend, and community events. Functional toilets, sinks, and plumbing will ensure a more comfortable environment and will allow for full access to all bathrooms to appropriately serve a building housing 2,000 individuals. In addition, upgraded and functional bathrooms will convey to the community a sense of pride in the school.

Please also provide the following:

Have the systems identified above been examined by an engineer or other trained building professional?:
YES

If "YES", please provide the name of the individual and his/her professional affiliation (maximum of 250 characters):
NORESCO conducted an investment grade audit of energy related systems, including HVAC and lighting systems.

The date of the inspection:

A summary of the findings (maximum of 5000 characters):
Existing fluorescent lighting needs to be replaced with LED and install lighting controls; heating controls need replacement; installation of energy management system recommended; installation of energy efficient transformers recommended.

Priority 7

Question 1: Please provide a detailed description of the programs not currently available due to facility constraints, the state or local requirement for such programs, and the facility limitations precluding the programs from being offered.

We currently have a number of facility constraints which result in not being able to offer important aspects of a varied and rich curriculum.

Art: District initiatives look to increase STEAM (Science Technology Engineering Art Math) opportunities for students in line with Massachusetts Visual Arts Curriculum
Frameworks. However, due to the facility we cannot implement such programs as the following:

o There is no open studio for students' photography work
o Studio based STEAM courses such as Industrial Design, Architecture, and Structures-- which are a component of the newly revised Massachusetts Design and Visual Communications Frameworks--cannot be offered due to lack of a workshop area with large tables, areas for electricity, and building space
o Limited access to functional in-class resources including sinks and cleaning areas for materials reduces curriculum-based projects
o Our Fine Arts courses cannot teach large scale paintings and projects because of a lack of dedicated wall space for the process of art making

Technology: District initiatives look to increase STEAM opportunities for students in line with Massachusetts Technical Education Curriculum Frameworks. However, due to the facility we are challenged to fully implement such programs as the following:

o Lack of appropriate and dedicated technology spaces prevents the school from meeting certain high-tech expectations within the Digital Learning Computer Standards Frameworks
o Suggested high tech programs such as CAD, Robotics, Industrial Design, Coding, Computer Programming, and 3D printing are not offered due to lack of electrical infrastructure and appropriate studio spaces
o Limited media production space and equipment which hinders expansion of successful pilot program
o Limited electrical outlets in all classrooms pose an impediment to increasing device use

Science: Massachusetts Science and Technology/Engineering Curriculum Frameworks indicate specific needs for the physical space and types of resources required for lab work:

o Complex labs from these curriculum frameworks should be added to biology and chemistry curriculum, but they currently cannot be due to existing lab issues;
o An engineering program aligned with Technology/Engineering Standards within the curriculum frameworks has not been implemented as there is no large open space classroom and electrical infrastructure to teach this course, or to store and operate equipment;
o Laboratory-based science classes for students in specialized programs are not offered consistently because of a lack of lab space. As a result, these students take their science class in a general education classroom, which is not educationally ideal for many within this population. In addition, a mainstream chemistry class is currently taking place in a Physics classroom, which does not have the proper equipment needed for a chemistry course, due to a lack of appropriately outfitted lab rooms

Physical Education: A component of one of the four goals in the Braintree Public Schools' five year strategic plan is to improve student success in the area of physical wellness. The district's objective to meet the physical aspect of the wellness goal states that we will "develop a plan that seeks to provide opportunities for students to be physically active throughout the school day." In order to fully support that objective, we would look to add the following:

o Offerings in such areas as spinning, aerobics, dance, aquatics, project adventure (low and high elements), which are

topics we cannot address because of our current
facility. Expansion of current Physical Education offerings to include elements from the Physical Activity and Fitness standard of the Massachusetts Comprehensive Health Curriculum Frameworks is, therefore, hindered
o More drinking water fountains throughout our current gymnasium, gymnastics, and fitness room facilities would benefit the health and well-being of students taking classes in these areas.

Priority 7

Question 2: Please describe the measures the district has taken or is planning to take in the immediate future to mitigate the problem(s) described above.

The capital costs of the some of the challenges described above, including space reconfiguration and renovation, are beyond the capacity of existing funding; however, ongoing investments are made through capital funds made available by the Mayor. Over the last several years, this has been primarily in the area of technology, where steps have been taken to enhance teaching and learning and the curriculum opportunities offered. The district was recently awarded a Digital Connections Grant which allowed for all schools in the district to create a robust wireless infrastructure. This has led to a Bring Your Own Device initiative, currently in the first year of a four-year phased process. In addition, technology equipment has been added through capital funding, resulting in an increase to the number of Chromebooks, the addition of a Mac computer lab used in music and world language classes, and, through a partnership with Braintree Cable Access Television (BCAM), equipment for students to use in Media Production classes. Our special education department has re-purposed a storage room to offer basic electronics classes to distinct populations.

Priority 7

Question 3: Please provide a detailed explanation of the impact of the problem described in this priority on your district's educational program. Please include specific examples of how the problem prevents the district from delivering the educational program it is required to deliver and how students and/or teachers are directly affected by the problem identified.

Many of the issues addressed in Question 1 demonstrate the fact that Braintree High School is regularly challenged to offer all components of 21st century educational programming. While existing programming in each of the areas mentioned are of high quality and delivered by talented faculty, there is more that should be offered to better enhance the education of our students. Essentially, the academic program should be expanded to include the following:

Art
o An open-studio photography program where students can display their work
o Studio courses such as Industrial Design, Architecture, and Structures
o A deeper curriculum in our Fine Arts courses driven by creative spaces and adequate resources

Technology
o High tech programs such as CAD, Coding, Computer Programming, and 3D printing
o Electrical infrastructure that supports the expansion of 21st Century devices and learning tools

Science
o Appropriately designed and outfitted science lab space in locations that allow for the sharing of materials and resources
o Complex labs in biology and chemistry
o A 21st century engineering program that is supported by the proper classroom spaces and equipment required
o Students in specialized programs taking full laboratory-based science classes in spaces designed to meet their unique needs

Physical Education
o Offerings in such areas as spinning, aerobics, dance, aquatics, project adventure (low and high elements) provided to our students

Career Vocational Technical Education
The absence of suitable or purposely-designed spaces has made it impossible to impossible to begin or expand CVTE offerings, which are necessary to students' full educational development.

Without the well-designed and spaces to deliver specialized curriculum and programming, the school is challenged to offer these opportunities to students. Many of the problems delineated requires a substantive change to the organization, outfitting, purposing, and configuration of classroom spaces at Braintree High School. The edifice that represented state-of-the-art educational thinking in 1972, is now strained to meet the learning needs of students preparing to enter a global economy.

Vote

REQUIRED FORM OF VOTE TO SUBMIT AN SOI

REQUIRED VOTES

If the SOI is being submitted by a City or Town, a vote in the following form is required from both the City Council/Board of Aldermen **OR** the Board of Selectmen/equivalent governing body **AND** the School Committee.

If the SOI is being submitted by a regional school district, a vote in the following form is required from the Regional School Committee only. FORM OF VOTE Please use the text below to prepare your City's, Town's or District's required vote(s).

FORM OF VOTE

Please use the text below to prepare your City's, Town's or District's required vote(s).

Resolved: Having convened in an open meeting on _____, prior to the closing date, the _____*[City Council/Board of Aldermen, Board of Selectmen/Equivalent Governing Body/School Committee]* of _____*[City/Town]*, in accordance with its charter, by-laws, and ordinances, has voted to authorize the Superintendent to submit to the Massachusetts School Building Authority the Statement of Interest dated _____ for the _____*[Name of School]* located at _____*[Address]* which describes and explains the following deficiencies and the priority category(s) for which an application may be submitted to the Massachusetts School Building Authority in the future

_____

_____

_____

_____

_____

_____; *[Insert a description of the priority(s) checked off on the Statement of Interest Form and a brief description of the deficiency described therein for each priority];* and hereby further specifically acknowledges that by submitting this Statement of Interest Form, the Massachusetts School Building Authority in no way guarantees the acceptance or the approval of an application, the awarding of a grant or any other funding commitment from the Massachusetts School Building Authority, or commits the City/Town/Regional School District to filing an application for funding with the Massachusetts School Building Authority.

CERTIFICATIONS

The undersigned hereby certifies that, to the best of his/her knowledge, information and belief, the statements and information contained in this statement of Interest and attached hereto are true and accurate and that this Statement of Interest has been prepared under the direction of the district school committee and the undersigned is duly authorized to submit this Statement of Interest to the Massachusetts School Building Authority. The undersigned also hereby acknowledges and agrees to provide the Massachusetts School Building Authority, upon request by the Authority, any additional information relating to this Statement of Interest that may be required by the Authority.

Chief Executive Officer *	**School Committee Chair**	**Superintendent of Schools**
(signature)	(signature)	(signature)
Date	Date	Date

* Local chief executive officer: In a city or town with a manager form of government, the manager of the municipality; in other cities, the mayor; and in other towns, the board of selectmen unless, in a city or town, some other municipal office is designated to the chief executive office under the provisions of a local charter. Please note, in districts where the Superintendent is also the Local Chief Executive Officer, it is required for the same person to sign the Statement of Interest Certifications twice.