1. Agenda

1.I. 7:30 PM Town Council

Documents:

20 MARCH 17 AGENDA.PDF

2. Documents

2.I. 7:30 PM Town Council

Documents:

2020 MARCH 17 COUNCIL MTG.PDF

Shannon L. Hume
President
At Large

Charles B. Ryan
At Large

Julia C. Flaherty
District 1

Steven A. Sciascia
District 2

David M. Ringius, Jr
Vice President
At Large

Donna L. Connors
District 3

Stephen C. O'Brien
District 4

Meredith Boericke
District 5

Lawrence C. Mackin, Jr.
District 6

OFFICE OF THE TOWN COUNCIL

– AGENDA –

Tuesday, MARCH 17, 2020 • Horace T. Cahill Auditorium, Town Hall • Starting Time: 7:30PM

As we are all aware, Governor Charles Baker has declared a state of emergency in Massachusetts to support the state's response to COVID-19 (Coronavirus). People should use their own judgment if they wish to attend meetings and events where there will be crowds. If you are ill or symptomatic, you should not attend. At the present time, Town meetings will continue to be held and open to the public as required by law and the Town can make no assurance of safety or assistance in prevent the transmission of illness. The Town continues to monitor the situation through the Health Department and specific questions should be directed to Jean McGinty, Public Health Nurse at 781-794-8094 or Marybeth McGrath, Director of Health, at 781-794-8095.

PLEDGE OF ALLEGIANCE/MOMENT OF SILENCE

ANNOUNCEMENTS

APPROVAL OF MINUTES

- None

OLD BUSINESS

- 002 20 Council President: Town Council Rules
- 19 044 Mayor: To Approve the purchase and resale of an affordable-housing unit at Turtle Crossing and the expenditure of funds for that purpose or take up any action relative thereto (Public Hearing to be continued)
- 20 022 Council President: Re-Appointment Town Clerk or take up any action relative thereto
- 20 036 Council President: Re-Appointment Clerk of the Council or up any action relative thereto
- 20 018 Comcast Petition: 262 Forbes Road or take up any action relative thereto
- 20 023 National Grid Petition: Liberty Street or take up any action relative thereto
- 20 024 National Grid Petition: Stonewood Lane or take up any action relative thereto
- 20 025 National Grid Petition: Wynot Road or take up any action relative thereto
- 20 026 National Grid Petition: Elm Street or take up any action relative thereto

Town of Braintree, One JFK Memorial Drive, Braintree, Massachusetts 02184-6498
Telephone: (781) 794-8152 Fax: (781) 794-8270 Email: towncouncil@braintreema.gov

OLD BUSINESS (continued)

- 20 032 Mayor: FY2020 Supplemental Appropriation #2 (Master Plan) or take up any action relative thereto (Public Hearing to be TABLED)
- 20 033 Mayor FY2020 Supplemental Appropriation #3 (PFAS Removal-Water Treatment Plant) up any action relative thereto (Public Hearing)
- 20 035 Mayor: Motion to Accept Massachusetts General Law c. 59 s. 5C ½ (additional real estate exemption) or take up any action relative thereto
- 20 037 Superintendent of Schools: Statement of Interest (SOI) with the MSBA for Braintree High School or take up any action relative thereto

NEW BUSINESS

- None

Topics the Chair does not reasonably anticipate will be discussed

UPCOMING MEETINGS:

Next Council Meeting scheduled on: **Tuesday, April 7, 2020 @7:30pm**

ADJOURNMENT

Shannon L. Hume
President
At Large

Charles B. Ryan
At Large

Julia C. Flaherty
District 1

Steven A. Sciascia
District 2

David M. Ringius, Jr
Vice President
At Large

Donna L. Connors
District 3

Stephen C. O'Brien
District 4

Meredith Boericke
District 5

Lawrence C. Mackin, Jr.
District 6

OFFICE OF THE TOWN COUNCIL

– AGENDA –

Tuesday, MARCH 17, 2020 • Horace T. Cahill Auditorium, Town Hall • Starting Time: 7:30PM

As we are all aware, Governor Charles Baker has declared a state of emergency in Massachusetts to support the state's response to COVID-19 (Coronavirus). People should use their own judgment if they wish to attend meetings and events where there will be crowds. If you are ill or symptomatic, you should not attend. At the present time, Town meetings will continue to be held and open to the public as required by law and the Town can make no assurance of safety or assistance in prevent the transmission of illness. The Town continues to monitor the situation through the Health Department and specific questions should be directed to Jean McGinty, Public Health Nurse at 781-794-8094 or Marybeth McGrath, Director of Health, at 781-794-8095.

PLEDGE OF ALLEGIANCE/MOMENT OF SILENCE

ANNOUNCEMENTS

APPROVAL OF MINUTES

- None

OLD BUSINESS

- 002 20 Council President: Town Council Rules
- 19 044 Mayor: To Approve the purchase and resale of an affordable-housing unit at Turtle Crossing and the expenditure of funds for that purpose or take up any action relative thereto (Public Hearing to be continued)
- 20 022 Council President: Re-Appointment Town Clerk or take up any action relative thereto
- 20 036 Council President: Re-Appointment Clerk of the Council or up any action relative thereto
- 20 018 Comcast Petition: 262 Forbes Road or take up any action relative thereto
- 20 023 National Grid Petition: Liberty Street or take up any action relative thereto
- 20 024 National Grid Petition: Stonewood Lane or take up any action relative thereto
- 20 025 National Grid Petition: Wynot Road or take up any action relative thereto
- 20 026 National Grid Petition: Elm Street or take up any action relative thereto

Town of Braintree, One JFK Memorial Drive, Braintree, Massachusetts 02184-6498
Telephone: (781) 794-8152 Fax: (781) 794-8270 Email: towncouncil@braintreema.gov

OLD BUSINESS (continued)

- 20 032 Mayor: FY2020 Supplemental Appropriation #2 (Master Plan) or take up any action relative thereto (Public Hearing to be TABLED)
- 20 033 Mayor FY2020 Supplemental Appropriation #3 (PFAS Removal-Water Treatment Plant) up any action relative thereto (Public Hearing)
- 20 035 Mayor: Motion to Accept Massachusetts General Law c. 59 s. 5C ½ (additional real estate exemption) or take up any action relative thereto
- 20 037 Superintendent of Schools: Statement of Interest (SOI) with the MSBA for Braintree High School or take up any action relative thereto

NEW BUSINESS

- None

Topics the Chair does not reasonably anticipate will be discussed

UPCOMING MEETINGS:

Next Council Meeting scheduled on: **Tuesday, April 7, 2020 @7:30pm**

ADJOURNMENT

Town Council
Policy & Procedure #4

Reappointment Policy for Officers appointed by Town Council

Officers appointed by the Braintree Town Council (Section 2-8, Braintree Town Charter) shall be entitled to notice by a majority vote of the Town Council of reappointment or non-reappointment as the case may be, a minimum of thirty (30) days prior to the completion date of the appointment.

Each employee covered by this Agreement shall notify the Council President in writing of intent to accept or reject a reappointment within two (2) weeks of receipt of written notice by certified mail. Failure to notify of acceptance shall be construed to mean an appointee does not intend to return. (Passed in Council – December 7, 2010)

- **20 022 Council President: Re-appointment Town Clerk or take up any action relative thereto**

MOTION: Pursuant to Section 2-8 (b) of the Charter of the Town of Braintree, the Town Council Re-Appoints James M. Casey as Town Clerk effective May 2, 2020.

Previous appointment effective: May 2, 2017.
(Note: According to #4 above officers appointed shall be entitled to notice a minimum of **thirty (30) days** prior to the completion date of the appointment – by **April 2, 2020 – closest Council Meeting is March 17, 2020**)

- **20 036 Council President: Re-appointment Clerk of the Council or take up any action relative thereto**

MOTION: Pursuant to Section 2-8 (c) of the Charter of the Town of Braintree, the Town Council Re-Appoints Susan M. Cimino as Clerk of the Council effective July 21, 2020.

Previous appointment effective: July 21, 2017
(Note: According to #4 above officers appointed shall be entitled to notice a minimum of **thirty (30) days** prior to the completion date of the appointment – by **June 20, 2020 – closest Council Meeting is June 16, 2020**)

Braintree Town Council

ORDER NO: 074 14 – Renumbered 15 033 DATE FILED: OCTOBER 21, 2014

REQUEST OF: COUNCILOR RYAN

Councilor Ryan has submitted to the Braintree Town Council for consideration an amendment to General Ordinances, Chapter 12.08 – Excavation and Obstructions:

To see if the Town will vote to amend its General Ordinances, Chapter 12.08 - Excavation and Obstructions, by amending Section 12.08.010, Permit, for the purpose of adding a new paragraph D and paragraph E as printed in the attachment hereto.

Make the following change to the Town Ordinances, Section 12.08.010,ADD subsections D.and E.,as follow:

12.08.010

D. Except as noted in Section E.below,no permit shall be granted within the moratorium period specified below for any non-emergency[1] excavation within the improved area.

Improvement	Description	longitudinal Trench	Transverse Trench (or transverse plus longitudinal totalling less then 150 feet.)
Reconstruction	New pavement over repaired or replaced granular base[2]	10 years	5 years
Mill & Overlay	New pavement over milled existing pavement	10 years	5 years
Overlay	l-inch plus full lane width overlay of existing pavement[2]	10 years	5 years
Shim with Microsurface, Chip Seal,Cape Seal,etc.	less than l-inch full width surface treatment over paved shim along middle area of road	10 years	5 years
Microsurface,Chip Seal, Cape Seal,etc.	Less than l-inch full width surface treatment over existing pavement	10 years	3 year
Other treatments	Not known at this time	TBD[3]	TBD[3]

E. The Town Council may grant a petition of National Grid or other gas company for a permit to excavate in an improved area under the moratorium and may require such mitigation and repairs as it sees fit, and it may require that surety be posted to secure the completion of the required mitigation and repairs.

The Mayor may grant a petition of others for a permit to excavate in an improved area under the moratorium for public safety related concerns, and may require such mitigation and repairs as he sees fit, and he may require that surety be posted to secure the completion of the required mitigation and repairs.

The minimum mitigation and surface repair requirement that should be expected for longitudinal excavation in an improved area in the first seven years of the moratorium is for full width curb to curb milling and re-paving for the full length of the excavation along the road plus another 25 feet at each end.[4]

The minimum mitigation and surface repair requirement that should be expected for a.) all transverse excavation or for b.) longitudinal excavation in the last three years of the moratorium is crown to curb milling and re-paving the extent of the excavation plus another 5 foot length each edge in the direction of traffic.[4]

All pavement markings shall be replaced in-kind.Curbs and sidewalks must be repaired or replaced, each to the satisfaction of the Highway Superintendant. Infrared treatment of seams may be required at the discretion of the Highway Superintendent.

[1] Emergency excavations for National Grid or other gas company shall consist of excavation to fix a "Grade 1" leak. For all others an emergency shall be as defined In Massachusetts' "DIG SAFE" law, MGL C.82 S 40 and 40A through 40E.

[2] Includes Improved sidewalks

[3] To be determined by the Town Council as cases arise.

[4] Length and/or width of repair may be varied at Intersections and In other special circumstances.

Braintree Town Council

YEAS: Bowes, Clifford, Hume, Kokoros, O'Brien, Owens, Powers, Ryan

NAYS: NONE

ABSENT: Mullaney

PASSED IN COUNCIL: AUGUST 11, 2015
PRESENTED TO MAYOR: AUGUST 12, 2015

A True Record, Attest:

8-17-15
Date Approved

James M. Casey, Town Clerk

Joseph C. Sullivan, Mayor

BRAINTREE DEPARTMENT OF PUBLIC WORKS

Charles C. Kokoros, Mayor

Engineering Division
Robert P. Campbell, PE, PTOE, Town Engineer
rcampbell@braintreema.gov
John J. Morse, Assistant Town Engineer
jmorse@braintreema.gov

Memo

Date: February 11, 2020
To: Susan M. Cimino, Clerk of the Council
From: Bob Campbell
CC: John Morse, Jim Arsenault, Darron MacDonald
RE: Comcast Petition, 262 Forbes Rd, 20-018
****

The DPW has reviewed the plans for the subject petition for the new communications cable location and have the following recommendations:

20-018 – Forbes Road to service 262 Forbes Road, install and maintain approximately 482 feet of communications cable in 1 - 4" PVC concrete encased conduit 24 inches deep, from an existing vault across from #222 Forbes Road to a new 3' X 3' manhole at the driveway into 262 Forbes Road.

This section of Forbes Road is not under the moratorium. The DPW recommends that the permit be granted with the normal conditions imposed by the DPW Highway Division plus that:

1. Forbes Road was not built under the Town's supervision and so the presence and locations of drainage pipes and other utilities are not definitively known. Visible evidence reveals the presence of water lines a drainage system within the scope of this proposed work. Care must be taken to support and not damage existing utilities, and a plan of the details of the conduit system installed as-built shall be submitted to the DPW Engineering Division and shall include sizes, materials and locations of all utilities encountered during the construction.
2. If sidewalk surfaces are disturbed the surface is to be replaced in kind, at ADA compliant slopes and for the full width of the sidewalk and including fully ADA compliant curb ramps where required;
3. The Traffic Management Plan sheets shall reference the 2009 MUTCD rather than the 2003 edition noted. Also, the advance warning signs on the northeast-bound approach must be extended further southwest due to the serious sight line constraint posed by the vertical curve in the roadway.
4. The required trench repair is to have the trench width temporary paved with two 3" courses of binder, and then for the permanent repair, mill off the first 1-1/2 inches

depth of the trench width plus one foot on each side, then clean, tack and repave the trench with 1-1/2 inches of top.

5. The drawing refers to plates. If they are to be used (as for in curing the concrete encasement) it should be for not more than one overnight, with asphalt ramps at all edges in the traffic area and signs warning of their presence.
6. All matches with existing surfaces be smooth, safe, properly surfaced and satisfactory to the Town;
7. The conduit shall be installed outside of the trenches of the water, sewer and drain lines and other utilities in service and that the trench pavement not be left low for any length of time;
8. The DPW shall be notified when the construction conflicts with Town utilities so the resolution can be mutually agreeable;
9. The construction portion of the permit period shall not exceed two months from the start of construction and the entire permit period shall be set at one year beginning at the date of Council approval.

We also recommend that the following requirement be added to the permit, if it is to be granted:

"Neither Comcast nor any of its contractors is authorized to close any street or to close a direction of travel to facilitate their work without authorization from the Director of the Department of Public Works or the Highway Superintendent. The Chief of Police can also authorize a closure for a police or fire emergency. Construction zone traffic safety issues are to be addressed by using appropriate traffic control signs and devices and the use of police officers for traffic control to safely guide traffic through the work zone. If a closure is authorized by the DPW, it shall not be implemented until signs and police officers (where needed) are properly in place in conformity with the written plan prepared by the contractor's engineer and approved by the DPW and Police Department."

Bob Campbell
Town Engineer

#20-018

COMCAST

Comcast
David R. Flewelling
Specialist 2 Construction
9 Forbes Road, Suite 9B
Woburn, MA 01801
Cell – 617-279-7864
dave_flewelling@comcast.com

January 21, 2020

Ms. Susan Cimino
Town Council Record Access
One JFK Memorial Drive
Braintree, MA 02184

RE: 262 Forbes Road
Grant of Location-Petition

Dear Ms. Cimino:

Enclosed please find materials supporting Comcast request for a grant of location from the Braintree Town Council. The work associated with the attached petition is for the purpose of installing new underground conduit to number 262 Forbes Road. For a detailed description of the work please refer to the attached construction plans and traffic control plans.

I look forward to the opportunity to address this matter in further detail at the next Braintree Town Council Meeting. Should you have any questions or concerns, please feel free to contact me at (617) 279-7864.

Sincerely,

David R. Flewelling
Comcast
Specialist 2, Construction

Enclosure (5)

RECEIVED TOWN CLERK
BRAINTREE, MA
2020 JAN 22 AM 9:07

#20-018

ORDER FOR CONDUIT LOCATION

In the Town Council for the Town of Braintree, Massachusetts.

ORDERED:

That permission be and hereby is granted to Comcast of Massachusetts III Inc., to lay and maintain underground conduits and manholes, with the wires and cables to be placed therein, under the surface of the following public way or ways as requested in petition of said Company dated January 21, 2020

Forbes Road: Starting at the existing manhole on Forbes Road located across from 222 Forbes Road. Excavating in a Southwesterly direction to place (1) 4" PVC Conduit 482'+/- to a proposed 3'x3' manhole. From the manhole the excavation continues on to private property to provide service to number 262 Forbes Road.

Substantially as shown on plan, filed with said petition.

Also that permission be and hereby is granted said Comcast to lay and maintain underground conduits, manholes, cables and wires in the above or intersecting public ways for the purpose of making connections with such poles and buildings as it may desire for distributing purposes.

The foregoing permission is subject to the following conditions:

1. The conduits and manholes shall be of such materials and construction and all work done in such manner as to be satisfactory to the Town Council or to such officers as it may appoint to the supervision of the work.
2. Said Company shall indemnify and save the Town harmless against all damages, costs and expense whatsoever to which the Town may be subjected in consequence of the acts or neglect of said Company, its agents or servants, or in any manner arising from the rights and privileges granted it by the Town.
3. In addition said Company shall, before a public way is disturbed for the laying of its wire or conduits, execute its bond in a penal sum of One Hundred Thousand Dollars ($100,000) (reference being had to the bond already on file with said Town) conditioned for the faithful performance of its duties under this permit.
4. Said Company shall comply with the requirements of existing by-laws and such as may hereafter be adopted governing the construction and maintenance of conduits and wires, so far as the same are not inconsistent with the laws of the Commonwealth.

I hereby certify that the foregoing order was adopted at a meeting of the Town Council for the Town of Braintree, Massachusetts, held on the _____ day of _____ 2020.

(over)

_____
City Clerk

RECEIVED TOWN CLERK
BRAINTREE, MA
2020 JAN 22 AM 9:08

#20-018

We hereby certify that on _____, 2020, at _____ o'clock PM., at Braintree, Massachusetts a public hearing was held on the petition of the Comcast for permission to lay and maintain underground conduits, manholes and connections, with the wires and cables to be placed therein, described in the order herewith recorded, that we mailed at least seven days before said hearing a written notice the time and place of said hearing to each of the owners of real estate determined by the last preceding assessment for taxation along the ways parts of ways upon which the Company is permitted to construct the lines said Company under said order. And that thereupon said order was duly adopted.

_____

_____

_____

_____

_____

Braintree Town Council; Braintree, Massachusetts

CERTIFICATE

I hereby certify that the foregoing is a true copy of a location order, and certificate of hearing with the notice adopted by the Town Council for the Town of Braintree, Massachusetts, on the _____ day of _____ 2020, recorded with the records of location orders of said Town, Book _____, Page _____. This certified copy is made under the provision of Chapter 166 of General Laws and any additions thereto or amendments thereof.

Attest:

_____

City Clerk

RECEIVED TOWN CLERK
BRAINTREE, MA
2020 JAN 22 AM 9:08

#20-018

PETITION OF COMCAST FOR LOCACTION FOR CONDUITS AND MANHOLES

To the Town Council for the Town of Braintree, Massachusetts:

Respectfully represents Comcast of Massachusetts III, Inc., a company incorporated for the distribution of telecommunications services, that it desires to construct a line for such telecommunications under the public way or ways hereinafter specified.

Forbes Road: Starting at the existing manhole on Forbes Road located across from 222 Forbes Road. Excavating in a Southwesterly direction to place (1) 4" PVC Conduit 482'+/- to a proposed 3'x3' manhole. From the manhole the excavation continues on to private property to provide service to number 262 Forbes Road.

Wherefore, your petition prays that, after due notice and hearing as provided by law, the Town Council may by Order grant your petitioner permission to construct, and a location for, such a line of conduits and manholes with the necessary wires and cables therein, said conduits and manholes to be located, substantially as shown on the plan made by Comcast dated November 7, 2019 and filed here with, under the following public way or ways of said Town of Braintree.

Comcast
By: _____
David R. Flewelling
Specialist 2, Construction

Dated this January 21,2020

Town of Braintree Massachusetts

Received and filed _____, 2020

_____

RECEIVED TOWN CLERK
BRAINTREE, MA
2020 JAN 22 AM 9:09

Office of the Board of Assessors

One JFK Memorial Drive
Braintree, Massachusetts 02184
Telephone: (781) 794-8050 • Fax: (781) 794-8068

#20-018

Joseph C. Sullivan
Mayor

Robert Brinkmann
Deputy Assessor

Board of Assessors
Robert Cusack
Chair
Susan O'Brien
Vice Chair
Robert Connolly

DATE:	November 13, 2019
OWNER:	Massachusetts Port Authority
ADDRESS:	Forbes Road
MAP & LOT:	2053C 0 1L

This is to certify that at the time of submission of this form to the Board of Assessors, the names and addresses of the parties assessed as adjoining owners to the parcel of land shown and described are as written and are the parties according to the records of the Assessors.

Office of the Board of Assessors (RS)

Robert M Cusack
Chairman

RECEIVED TOWN CLERK
BRAINTREE, MA
2020 JAN 22 AM 9:09

Braintree
Abutters List

Subject Parcel ID:

Subject Property Location:

ParcelID	Location	Owner	Co-Owner	Mailing Address	City	State	Zip
2053B 0 3A	220 REAR FORBES RD	STJ FORBES EQUITY PARTNERS L	c/o KS PARTNERS LLC	150 E 58TH ST STE 2000	NEW YORK	NY	10155
2053B 0 4	121 GRANDVIEW RD	THE FLATLEY 06 LLC		45 BRAINTREE HILL OFF PK	BRAINTREE	MA	02184
2053B 0 5	GRANDVIEW RD	MASSACHUSETTS PORT AUTHO	C/O MICHAEL GRIECO	1 HARBORSIDE DRIVE	EAST BOSTON	MA	02128
2053B 0 6	236 240 WOOD RD	WOOD ON WOOD ROAD INC	C/O ANO LLC	844 ALTON RD #3	MIAMI	FL	33139
2053C 0 1A	WEST ST	BLUE HILL CEMETERY INC		702 WEST ST	BRAINTREE	MA	02184
2053C 0 1G	320 WOOD RD	HARVEY PROPCO LLC		1400 MAIN STREET	WALTHAM	MA	02451
2053C 0 1J	340 WOOD RD	340 WOOD ROAD LLC	C/O NOVAYA RE VENTURE	120 WATER ST 3RD FL	BOSTON	MA	02109
2053C 0 1L	FORBES RD	MASSACHUSETTS PORT AUTHO	C/O MICHAEL GRIECO	1 HARBORSIDE DRIVE	EAST BOSTON	MA	02128
2053C 0 1M	290 WOOD RD	THE WOOD ROAD NOM TRUST I	C/O THE MBA GROUP KRAT	135 WOOD ROAD	BRAINTREE	MA	02184
2053D 0 4	WEST ST	BLUE HILL CEMETERY ASSOC		702 WEST ST	BRAINTREE	MA	02184

Parcel Count: **10**

End of Report

RECEIVED TOWN CLERK
BRAINTREE, MA
2020 JAN 22 AM 9:09

#20-018

#20-018

RECEIVED TOWN CLERK
BRAINTREE, MA

2020 FEB -7 PM 4:28

#20-018

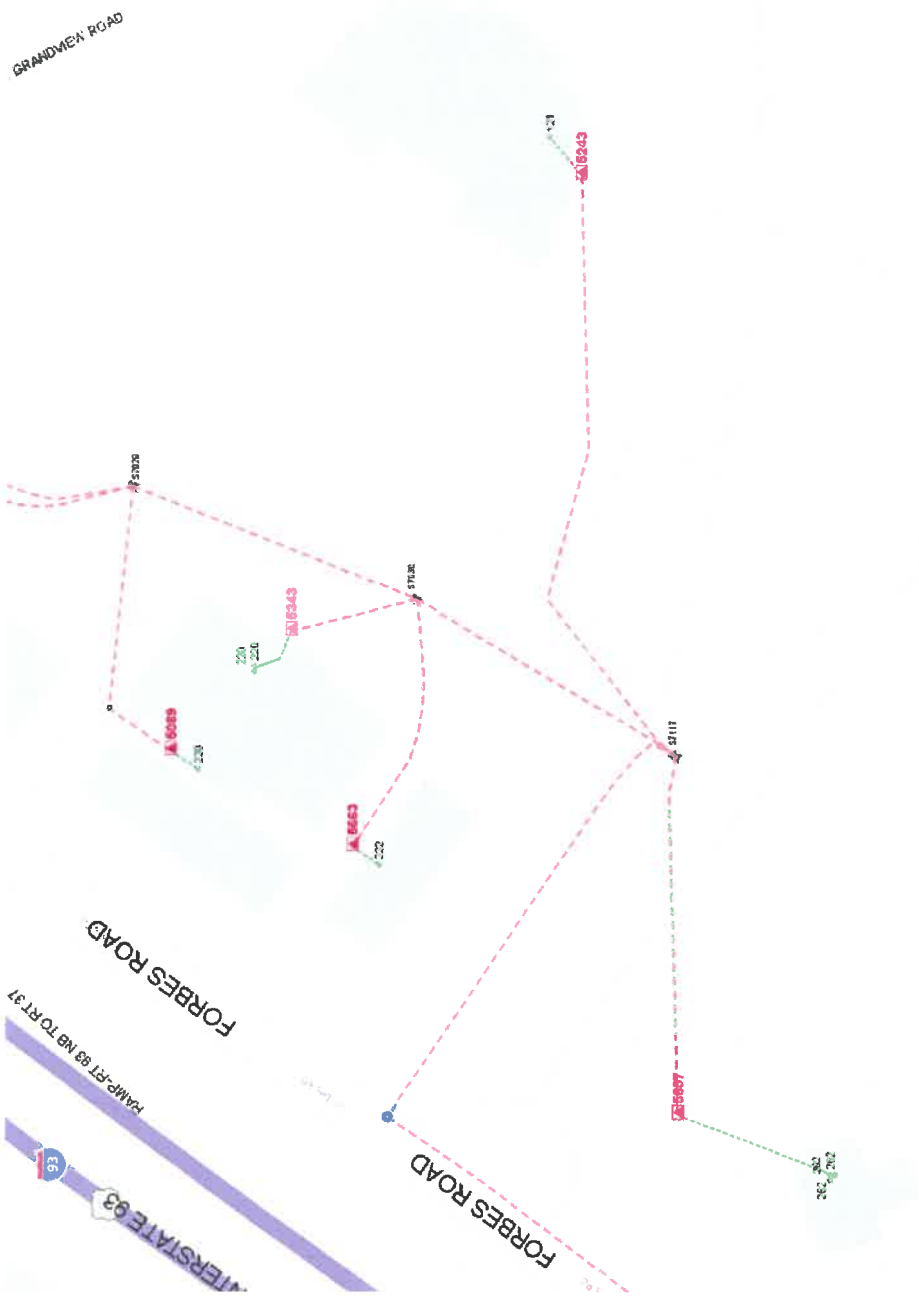

#20-018

150 Potter Road
Braintree, MA 02184
www.beld.com
781.348.BELD
781.348.1003 fax

RECEIVED TOWN CLERK
BRAINTREE, MA
2020 FEB -7 PM 4:28

Date: 1/28/20

Ms. Susan Cimino
One JFK Memorial Drive
Braintree, Ma 02184

Dear Ms. Cimino,

Comcast Petition: # 20-018 @ 262 Forbes Rd.

Please see attached underground utilities map, contractor to follow Dig safe procedures. Comcast to notify BELD of any utility conflicts or scope of work changes.

Sincerely,

Darron MacDonald
Field Engineer
Office: 781.348-1072
Cell: 339-235-6450

PHASE I

TRAFFIC LEGEND	
	WORK ZONE
	PROPOSED TRENCH
	CHANNELIZING DEVICE (CONE)
	DRUM
	SIGN
	POLICE DETAIL
	SINGLE PARKING METER
	DOUBLE PARKING METER
V	VARIABLE MESSAGE BOARD
	ARROW BOARD
	TYPE 3 BARRICADE
	HIGH LEVEL WARNING DEVICE
	CONSTRUCTION TRUCK
	TRUCK MOUNTED ATTENUATOR
	TRAFFIC FLOW
	TRAFFIC FLOW
	TRAFFIC FLOW
	TRAFFIC FLOW
	2 WAY TRAFFIC

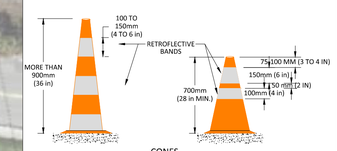

CONES
NIGHT AND/OR FREEWAY
HIGH SPEED ROADWAY
(≤70 km/h) (≤ 45 mph)
N.T.S.

PAGE 6F-31
MANUAL ON UNIFORM
TRAFFIC CONTROL DEVICES
(MUTCD) 2003 EDITION - REV 2
REV. DECEMBER 2007

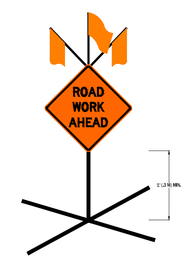

FREE STANDING
SELF SUPPORT SIGN
(TYPICAL)
(NOT TO SCALE)

PAGE 581-582
PER SEC. 6F.03
MUTCD 2009 EDITION, DECEMBER 2009

REV #	DESCRIPTION	DATE

NOTE:
EXISTING UTILITIES SHOWN ARE APPROXIMATE AND NOT WARRANTED TO BE CORRECT. THE CONTRACTOR SHALL VERIFY THE LOCATION OF ALL PUBLIC AND PRIVATE UTILITIES PRIOR TO BEGINNING ANY EXCAVATION.

811 DigSafe MA & RHO ISLAND AND VT

KNOW WHAT'S BELOW CALL BEFORE YOU DIG IT'S FREE AND IT'S THE LAW

CALL 811 OR 1-888-DIG-SAFE

NOTES:
262 FORBES RD - BRAINTREE

SCALE:
1"= 40 FEET
0 40 80 120 160

NOTE:
CONTRACTOR TO PLACE SIGNS AND TRAFFIC CHANNELIZATION DEVICES PER THE MUTCD.

NOTE:
POLICE DETAIL OFFICER TO SET UP HIS POSITION AS NEEDED IN FIELD.

NOTE:
MAINTAIN PEDESTRIAN ACCESS AT ALL TIME WITH ADA COMPLIANCE.

PREPARED BY:
PIKE TELECOM
21 Oxford Rd
Mansfield, MA 02048
www.piketelecom.org
1-508-337-7600

PREPARED FOR:
comcast

TITLE:
TRAFFIC MANAGEMENT PLAN - PHASE I
262 FORBES RD
BRAINTREE, MA

SURVEYED BY: PIKE TELECOM	PRINT NO: 1 OF 3
DRAWN BY: MS	SCALE: 1"=40'
DATE: 01/08/20	

01/9/2020 N:\CADD\COMCAST\OBS\BRAINTREE\Braintree - 262 Forbes Rd\TMP\AA - AUTOCAD\262 FORBES RD - BRAINTREE.dwg

PHASE II

Notes for Figure 6H-10--Typical Application 10
Lane Closure on a Two-Lane Road Using Flaggers

Option:

1. For low-volume situations with short work zones on straight roadways where the flagger is visible to road users approaching from both directions, a single flagger, positioned to be visible to road users approaching from both directions, may be used (see Chapter 6E).
2. The ROAD WORK AHEAD and the END ROAD WORK signs may be omitted for short-duration operations.
3. Flashing warning lights and/or flags may be used to call attention to the advance warning signs. A BE PREPARED TO STOP sign may be added to the sign series.

Guidance:

4. *The buffer space should be extended so that the two-way traffic taper is placed before a horizontal (or crest vertical) curve to provide adequate sight distance for the flagger and a queue of stopped vehicles.*

Standard:

5. **At night, flagger stations shall be illuminated, except in emergencies.**

Guidance:

6. *When used, the BE PREPARED TO STOP sign should be located between the Flagger sign and the ONE LANE ROAD sign.*
7. *When a grade crossing exists within or upstream of the transition area and it is anticipated that queues resulting from the lane closure might extend through the grade crossing, the TTC zone should be extended so that the transition area precedes the grade crossing.*
8. *When a grade crossing equipped with active warning devices exists within the activity area, provisions should be made for keeping flaggers informed as to the activation status of these warning devices.*
9. *When a grade crossing exists within the activity area, drivers operating on the left-hand side of the normal center line should be provided with comparable warning devices as for drivers operating on the right-hand side of the normal center line.*
10. *Early coordination with the railroad company or light rail transit agency should occur before work starts.*

Option:

11. A flagger or a uniformed law enforcement officer may be used at the grade crossing to minimize the probability that vehicles are stopped within 15 feet of the grade crossing, measured from both sides of the outside rails.

Figure 6H-10 Page 652-653
Section 6H-01 of the
Manual On Uniform Traffic Control Devices (MUTCD)
2009 Edition

TYPE III BARRICADE **

* NOMINAL LUMBER DIMENSIONS ARE SATISFACTORY FOR BARRICADE RAIL WIDTH DIMENSIONS.

** RAIL STRIPE WIDTHS SHALL BE 6 INCHES EXCEPT WHERE RAIL LENGTHS ARE LESS THAN 36 INCHES, THEN 4 INCH WIDE STRIPES MAY BE USED.

THE SIDES OF BARRICADE FACING TRAFFIC SHALL HAVE RETROFLECTIVE RAIL FACES.

TRAFFIC LEGEND	
	WORK ZONE
	PROPOSED TRENCH
	CHANNELIZING DEVICE (CONE)
	DRUM
	SIGN
	POLICE DETAIL
	SINGLE PARKING METER
	DOUBLE PARKING METER
V	VARIABLE MESSAGE BOARD
	ARROW BOARD
	TYPE 3 BARRICADE
	HIGH LEVEL WARNING DEVICE
	CONSTRUCTION TRUCK
	TRUCK MOUNTED ATTENUATOR
	TRAFFIC FLOW
	TRAFFIC FLOW
	TRAFFIC FLOW
	TRAFFIC FLOW
	2 WAY TRAFFIC

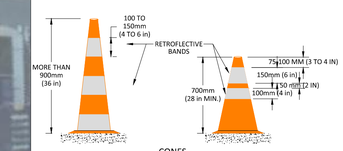

CONES
NIGHT AND/OR FREEWAY
HIGH SPEED ROADWAY
(≤70 km/h) (≤ 45 mph)
N.T.S.

PAGE 6F-31
MANUAL ON UNIFORM
TRAFFIC CONTROL DEVICES
(MUTCD) 2003 EDITION - REV 2
REV. DECEMBER 2007

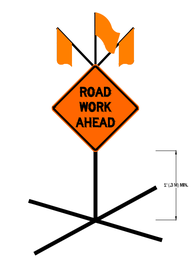

FREE STANDING
SELF SUPPORT SIGN
(TYPICAL)
(NOT TO SCALE)

PAGE 581-582
PER SEC. 6F.03
MUTCD 2009 EDITION, DECEMBER 2009

REV #	DESCRIPTION	DATE

NOTE:
EXISTING UTILITIES SHOWN ARE APPROXIMATE AND NOT WARRANTED TO BE CORRECT. THE CONTRACTOR SHALL VERIFY THE LOCATION OF ALL PUBLIC AND PRIVATE UTILITIES PRIOR TO BEGINNING ANY EXCAVATION.

811 DigSafe MA.ME.NH.RI.VT

KNOW WHAT'S BELOW
CALL BEFORE YOU DIG
IT'S FREE AND IT'S THE LAW

CALL 811 OR 1-888-DIG-SAFE

NOTES:
262 FORBES RD - BRAINTREE

SCALE:
1"= 40 FEET
0 40 80 120 160

NOTE:
CONTRACTOR TO PLACE SIGNS AND TRAFFIC CHANNELIZATION DEVICES PER THE MUTCD.

NOTE:
POLICE DETAIL OFFICER TO SET UP HIS POSITION AS NEEDED IN FIELD.

NOTE:
MAINTAIN PEDESTRIAN ACCESS AT ALL TIME WITH ADA COMPLIANCE.

PREPARED BY:
PIKE TELECOM
21 Oxford Rd
Mansfield, MA 02048
www.piketelecom.org
1-508-337-7600

PREPARED FOR:
comcast

TITLE:
TRAFFIC MANAGEMENT PLAN - PHASE II
262 FORBES RD
BRAINTREE, MA

SURVEYED BY: PIKE TELECOM	PRINT NO: 2 OF 3
DRAWN BY: MS	SCALE: 1"=40'
DATE: 01/08/20	

01/9/2020 N:\CADD\COMCAST\JOBS\BRAINTREE\Braintree - 262 Forbes Rd\TMP\AA - AUTOCAD\262 FORBES RD - BRAINTREE.dwg

PHASE III

Notes for Figure 6H-10--Typical Application 10
Lane Closure on a Two-Lane Road Using Flaggers

Option:

1. For low-volume situations with short work zones on straight roadways where the flagger is visible to road users approaching from both directions, a single flagger, positioned to be visible to road users approaching from both directions, may be used (see Chapter 6E).
2. The ROAD WORK AHEAD and the END ROAD WORK signs may be omitted for short-duration operations.
3. Flashing warning lights and/or flags may be used to call attention to the advance warning signs. A BE PREPARED TO STOP sign may be added to the sign series.

Guidance:

4. *The buffer space should be extended so that the two-way traffic taper is placed before a horizontal (or crest vertical) curve to provide adequate sight distance for the flagger and a queue of stopped vehicles.*

Standard:

5. **At night, flagger stations shall be illuminated, except in emergencies.**

Guidance:

6. *When used, the BE PREPARED TO STOP sign should be located between the Flagger sign and the ONE LANE ROAD sign.*
7. *When a grade crossing exists within or upstream of the transition area and it is anticipated that queues resulting from the lane closure might extend through the grade crossing, the TTC zone should be extended so that the transition area precedes the grade crossing.*
8. *When a grade crossing equipped with active warning devices exists within the activity area, provisions should be made for keeping flaggers informed as to the activation status of these warning devices.*
9. *When a grade crossing exists within the activity area, drivers operating on the left-hand side of the normal center line should be provided with comparable warning devices as for drivers operating on the right-hand side of the normal center line.*
10. *Early coordination with the railroad company or light rail transit agency should occur before work starts.*

Option:

11. A flagger or a uniformed law enforcement officer may be used at the grade crossing to minimize the probability that vehicles are stopped within 15 feet of the grade crossing, measured from both sides of the outside rails.

Figure 6H-10 Page 652-653
Section 6H-01 of the
Manual On Uniform Traffic Control Devices (MUTCD)
2009 Edition

TRAFFIC LEGEND	
	WORK ZONE
	PROPOSED TRENCH
	CHANNELIZING DEVICE (CONE)
	DRUM
	SIGN
	POLICE DETAIL
	SINGLE PARKING METER
	DOUBLE PARKING METER
	VARIABLE MESSAGE BOARD
	ARROW BOARD
	TYPE 3 BARRICADE
	HIGH LEVEL WARNING DEVICE
	CONSTRUCTION TRUCK
	TRUCK MOUNTED ATTENUATOR
	TRAFFIC FLOW
	TRAFFIC FLOW
	TRAFFIC FLOW
	TRAFFIC FLOW
	2 WAY TRAFFIC

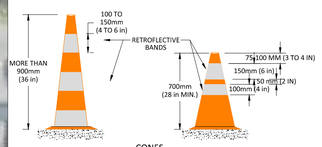

CONES
NIGHT AND/OR FREEWAY
HIGH SPEED ROADWAY
(≤70 km/h) (≤ 45 mph)
N.T.S.

PAGE 6F-31
MANUAL ON UNIFORM
TRAFFIC CONTROL DEVICES
(MUTCD) 2003 EDITION - REV 2
REV. DECEMBER 2007

TYPE III BARRICADE **

* NOMINAL LUMBER DIMENSIONS ARE SATISFACTORY FOR BARRICADE RAIL WIDTH DIMENSIONS.

** RAIL STRIPE WIDTHS SHALL BE 6 INCHES EXCEPT WHERE RAIL LENGTHS ARE LESS THAN 36 INCHES, THEN 4 INCH WIDE STRIPES MAY BE USED.

THE SIDES OF BARRICADE FACING TRAFFIC SHALL HAVE RETROFLECTIVE RAIL FACES.

FREE STANDING
SELF SUPPORT SIGN
(TYPICAL)
(NOT TO SCALE)

PAGE 581-582
PER SEC. 6F.03
MUTCD 2009 EDITION, DECEMBER 2009

REV #	DESCRIPTION	DATE

NOTE:
EXISTING UTILITIES SHOWN ARE APPROXIMATE AND NOT WARRANTED TO BE CORRECT. THE CONTRACTOR SHALL VERIFY THE LOCATION OF ALL PUBLIC AND PRIVATE UTILITIES PRIOR TO BEGINNING ANY EXCAVATION.

811 DigSafe

KNOW WHAT'S BELOW
CALL BEFORE YOU DIG
IT'S FREE AND IT'S THE LAW

CALL 811 OR 1-888-DIG-SAFE

NOTES:
262 FORBES RD - BRAINTREE

SCALE:
1"= 30 FEET
0 30 60 90 120

NOTE:
CONTRACTOR TO PLACE SIGNS AND TRAFFIC CHANNELIZATION DEVICES PER THE MUTCD.

NOTE:
POLICE DETAIL OFFICER TO SET UP HIS POSITION AS NEEDED IN FIELD.

NOTE:
MAINTAIN PEDESTRIAN ACCESS AT ALL TIME WITH ADA COMPLIANCE.

PREPARED BY:
PIKE TELECOM
21 Oxford Rd
Mansfield, MA 02048
www.piketelecom.org
1-508-337-7600

PREPARED FOR:
comcast

TITLE:
TRAFFIC MANAGEMENT PLAN - PHASE III
262 FORBES RD
BRAINTREE, MA

SURVEYED BY: PIKE TELECOM	PRINT NO: 3 OF 3
DRAWN BY: MS	SCALE: 1"=30'
DATE: 01/08/20	

01/9/2020 N:\CADD\COMCAST\OBS\BRAINTREE\Braintree - 262 Forbes Rd\TMP\AA - AUTOCAD\262 FORBES RD - BRAINTREE.dwg

GENERAL NOTES

1. THE LOCATIONS OF EXISTING UNDERGROUND UTILITIES ARE SHOWN IN AN APPROXIMATE WAY ONLY AND HAVE NOT BEEN INDEPENDENTLY VERIFIED BY THE OWNER OR ITS REPRESENTATIVE. THE CONTRACTOR SHALL DETERMINE THE EXACT LOCATION OF ALL EXISTING UTILITIES BEFORE COMMENCING WORK, AND SHALL BE FULLY RESPONSIBLE FOR ANY AND ALL DAMAGES WHICH MIGHT BE OCCASIONED BY THE CONTRACTOR'S FAILURE TO EXACTLY LOCATE AND PRESERVE ANY AND ALL UNDERGROUND UTILITIES.

2. WHERE AN EXISTING UTILITY IS FOUND TO CONFLICT WITH THE PROPOSED WORK, THE LOCATION, ELEVATION AND SIZE OF THE UTILITY SHALL BE ACCURATELY DETERMINED WITHOUT DELAY BY THE CONTRACTOR, AND THE INFORMATION FURNISHED TO THE ENGINEER FOR RESOLUTION OF THE CONFLICT.

3. THE CONTRACTOR SHOULD MAINTAIN A SEPARATION OF 18 INCHES MIN. WHEN CROSSING EXISTING WATER FACILITIES.

4. THE CONTRACTOR SHALL MAKE ALL ARRANGEMENTS FOR THE ALTERATION AND ADJUSTMENT OF GAS, ELECTRIC, TELEPHONE AND ANY OTHER PRIVATE UTILITIES BY THE UTILITY COMPANY.

5. THE CONTRACTOR SHALL NOT DISTURB PUBLIC TREES AND SHRUBS.

6. AREAS OUTSIDE THE LIMITS OF PROPOSED WORK DISTURBED BY THE CONTRACTOR'S OPERATIONS SHALL BE RESTORED BY THE CONTRACTOR TO THEIR ORIGINAL CONDITION AT NO EXPENSE TO THE OWNER.

7. THE CONTRACTOR SHALL BE RESPONSIBLE FOR PLACING AND MAINTAINING TEMPORARY RESURFACING AND/OR PLATING FOR ALL EXCAVATIONS IN PAVED STREETS AND SIDEWALKS UNTIL PERMANENT RESURFACING IS COMPLETE.

8. JOINTS BETWEEN NEW BITUMINOUS CONCRETE ROADWAY PAVEMENT AND SAW CUT EXISTING PAVEMENT SHALL BE SEALED WITH BITUMEN AND BACK SANDED.

9. THE CONTRACTOR SHALL PROTECT AND SUPPORT ALL EXISTING UTILITY LINES THAT BECOME EXPOSED DUE TO EXCAVATION REQUIRED TO INSTALL THE PROPOSED CONDUIT.

10. THE CONTRACTOR SHALL REPLACE ALL DISTURBED TRAFFIC SIGNAL LOOP DETECTORS TO GOOD WORKING CONDITION AS REQUIRED BY THE LATEST STANDARDS OF THE MUNICIPAL TRAFFIC DEPARTMENT.

11. ALL EXISTING STATE, COUNTY, CITY, AND TOWN LOCATION LINES AND PRIVATE PROPERTY LINES HAVE BEEN ESTABLISHED FROM AVAILABLE INFORMATION AND THEIR EXACT LOCATION ARE NOT GUARANTEED.

12. THE CONTRACTOR SHALL REPLACE ALL PAVEMENT MARKINGS IN THEIR ENTIRETY THAT HAVE BEEN DAMAGED BY TRENCH EXCAVATION OR OPERATIONS OF THE CONTRACTOR WITH SIMILAR COLOR AND SIZE THERMOPLASTIC MARKINGS.

* - ITEM SHOWN ON UTILITY RECORDS, BUT NOT FOUND IN FIELD.

~ - ITEM FOUND IN FIELD, BUT NOT IN UTILITY RECORDS.

ALL FIELD DATA ACQUIRED USING TOTAL STATION SURVEY EQUIPMENT

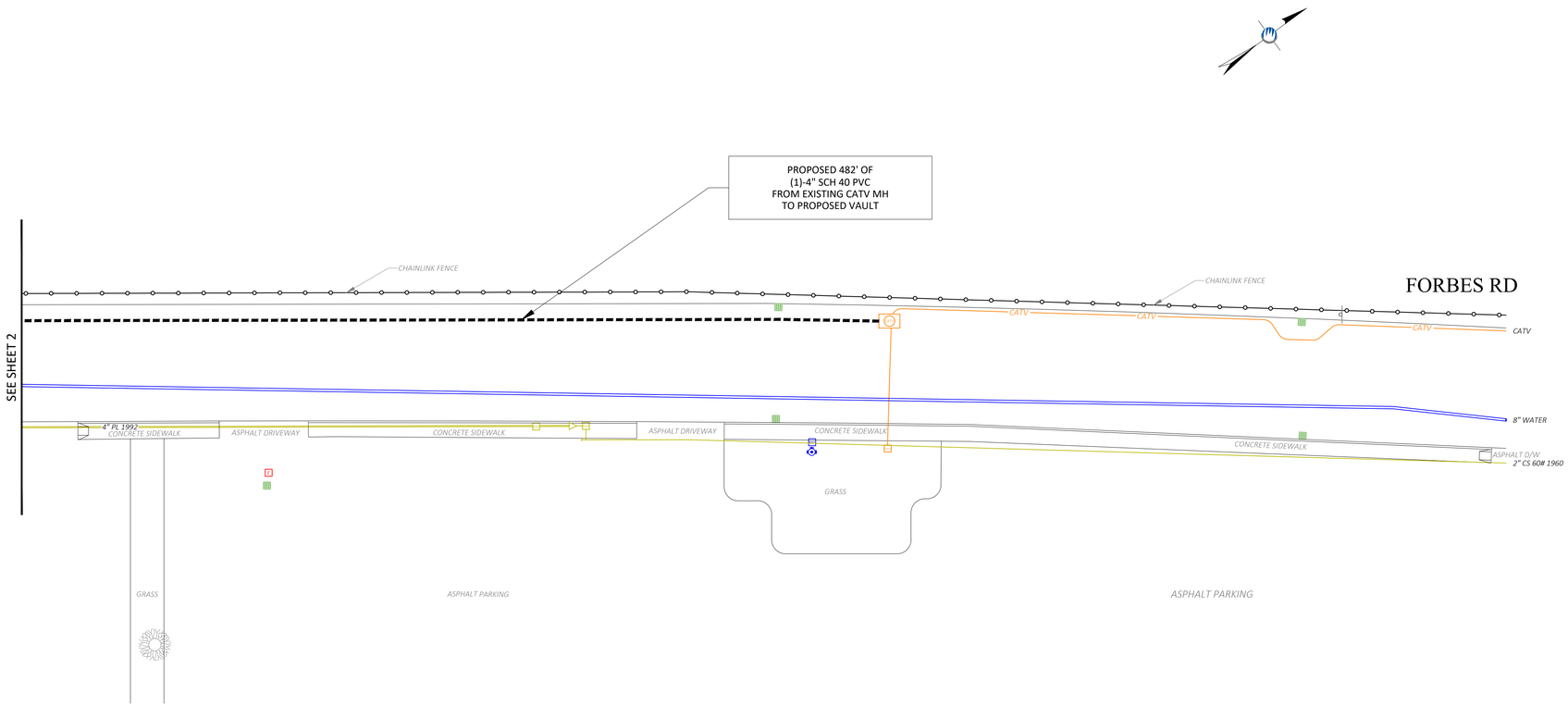

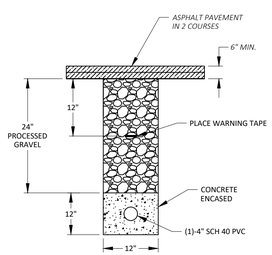

PROPOSED DUCT CONFIGURATION

ROADWAY PATCH AND DUCT BANK INSTALLATION DETAIL

N.T.S.

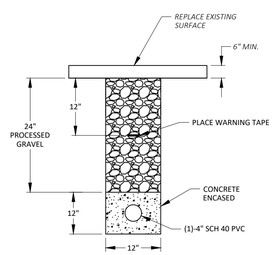

PROPOSED DUCT CONFIGURATION

SIDEWALK PATCH AND DUCT BANK INSTALLATION DETAIL

N.T.S.

1"= 20 FEET (PRINTED 22X34)
1"= 40 FEET (PRINTED 11X17)

0 20 40 60 80

LEGEND

	ELECTRIC POLE		CATCH BASIN
	JOINT UTILITY POLE	C	CATV HANDHOLE
	LAMP POST		COMM PEDESTAL
	TRAFFIC LIGHT	E	ELECTRIC HANDHOLE
CATV	CATV MANHOLE		FIRE HYDRANT
D	DRAIN MANHOLE	G	GAS GATE
E	ELECTRIC MANHOLE	GM	GAS METER
S	SEWER MANHOLE	IRR	IRRIGATION VALVE
T	TELEPHONE MANHOLE	MB	MAIL BOX
W	WATER MANHOLE		PARKING METER(S)
	POLE ANCHOR GUY	SG	SEWER GATE
	BUSH/SHRUB		SIGN POLE
R/W	RIGHT OF WAY		STEEL POST
	CULVERT		STONE BOUND
	FENCE		STREET LIGHT
	GUARD RAIL	T	TEL HANDHOLE
ELEC VAULT	ELECTRIC VAULT		TRANSFORMER
TRAF HH	TRAFFIC HANDHOLE		UG CABLE MARKER
	PROPOSED HANDHOLE	WG	WATER GATE
	PROPOSED CONDUIT	WM	WATER METER

NOTE:
EXISTING UTILITIES SHOWN ARE APPROXIMATE AND NOT WARRANTED TO BE CORRECT. THE CONTRACTOR SHALL VERIFY THE LOCATION OF ALL PUBLIC AND PRIVATE UTILITIES PRIOR TO BEGINNING ANY EXCAVATION.

CALL BEFORE YOU DIG
UNDERGROUND SERVICE ALERT
72 HOURS NOTICE REQUIRED.
ENTER 1-888-DIG-SAFE

PREPARED BY:

PIKE TELECOM

21 Oxford Rd
Mansfield, MA 02048
www.piketelecom.org
1-508-337-7600

PREPARED FOR:

comcast

REV #	DESCRIPTION	DATE

TITLE:

BRAINTREE - 262 FORBES RD

BRAINTREE , MA
VERIZON - PETITION PLAN

SURVEYED BY: PIKE TELECOM	PRINT NO: 1 OF 2
DRAWN BY: NF	SCALE: AS NOTED
DATE: 11/7/19	AS-BUILT:

12/17/2019 N:\CADD\COMCAST\2019\BRAINTREE\Braintree - 262 Forbes Rd\PPLAN\A - AUTOCAD\262 FORBES RD - PPLAN - BLACK.dwg

GENERAL NOTES

1. THE LOCATIONS OF EXISTING UNDERGROUND UTILITIES ARE SHOWN IN AN APPROXIMATE WAY ONLY AND HAVE NOT BEEN INDEPENDENTLY VERIFIED BY THE OWNER OR ITS REPRESENTATIVE. THE CONTRACTOR SHALL DETERMINE THE EXACT LOCATION OF ALL EXISTING UTILITIES BEFORE COMMENCING WORK, AND SHALL BE FULLY RESPONSIBLE FOR ANY AND ALL DAMAGES WHICH MIGHT BE OCCASIONED BY THE CONTRACTOR'S FAILURE TO EXACTLY LOCATE AND PRESERVE ANY AND ALL UNDERGROUND UTILITIES.

2. WHERE AN EXISTING UTILITY IS FOUND TO CONFLICT WITH THE PROPOSED WORK, THE LOCATION, ELEVATION AND SIZE OF THE UTILITY SHALL BE ACCURATELY DETERMINED WITHOUT DELAY BY THE CONTRACTOR, AND THE INFORMATION FURNISHED TO THE ENGINEER FOR RESOLUTION OF THE CONFLICT.

3. THE CONTRACTOR SHOULD MAINTAIN A SEPARATION OF 18 INCHES MIN. WHEN CROSSING EXISTING WATER FACILITIES.

4. THE CONTRACTOR SHALL MAKE ALL ARRANGEMENTS FOR THE ALTERATION AND ADJUSTMENT OF GAS, ELECTRIC, TELEPHONE AND ANY OTHER PRIVATE UTILITIES BY THE UTILITY COMPANY.

5. THE CONTRACTOR SHALL NOT DISTURB PUBLIC TREES AND SHRUBS.

6. AREAS OUTSIDE THE LIMITS OF PROPOSED WORK DISTURBED BY THE CONTRACTOR'S OPERATIONS SHALL BE RESTORED BY THE CONTRACTOR TO THEIR ORIGINAL CONDITION AT NO EXPENSE TO THE OWNER.

7. THE CONTRACTOR SHALL BE RESPONSIBLE FOR PLACING AND MAINTAINING TEMPORARY RESURFACING AND/OR PLATING FOR ALL EXCAVATIONS IN PAVED STREETS AND SIDEWALKS UNTIL PERMANENT RESURFACING IS COMPLETE.

8. JOINTS BETWEEN NEW BITUMINOUS CONCRETE ROADWAY PAVEMENT AND SAW CUT EXISTING PAVEMENT SHALL BE SEALED WITH BITUMEN AND BACK SANDED.

9. THE CONTRACTOR SHALL PROTECT AND SUPPORT ALL EXISTING UTILITY LINES THAT BECOME EXPOSED DUE TO EXCAVATION REQUIRED TO INSTALL THE PROPOSED CONDUIT.

10. THE CONTRACTOR SHALL REPLACE ALL DISTURBED TRAFFIC SIGNAL LOOP DETECTORS TO GOOD WORKING CONDITION AS REQUIRED BY THE LATEST STANDARDS OF THE MUNICIPAL TRAFFIC DEPARTMENT.

11. ALL EXISTING STATE, COUNTY, CITY, AND TOWN LOCATION LINES AND PRIVATE PROPERTY LINES HAVE BEEN ESTABLISHED FROM AVAILABLE INFORMATION AND THEIR EXACT LOCATION ARE NOT GUARANTEED.

12. THE CONTRACTOR SHALL REPLACE ALL PAVEMENT MARKINGS IN THEIR ENTIRETY THAT HAVE BEEN DAMAGED BY TRENCH EXCAVATION OR OPERATIONS OF THE CONTRACTOR WITH SIMILAR COLOR AND SIZE THERMOPLASTIC MARKINGS.

* - ITEM SHOWN ON UTILITY RECORDS, BUT NOT FOUND IN FIELD.

~ - ITEM FOUND IN FIELD, BUT NOT IN UTILITY RECORDS.

ALL FIELD DATA ACQUIRED USING TOTAL STATION SURVEY EQUIPMENT

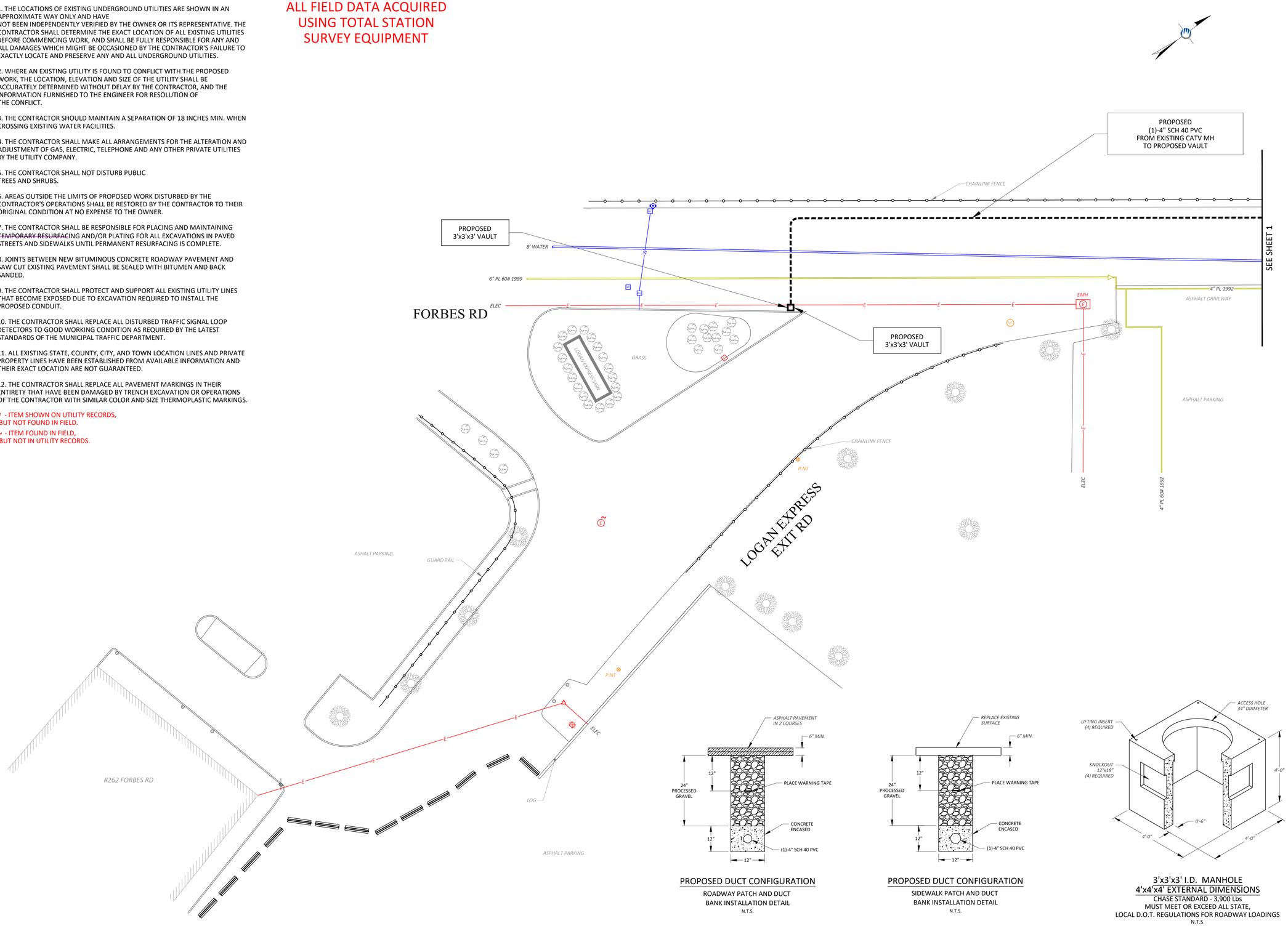

PROPOSED DUCT CONFIGURATION

ROADWAY PATCH AND DUCT BANK INSTALLATION DETAIL

N.T.S.

PROPOSED DUCT CONFIGURATION

SIDEWALK PATCH AND DUCT BANK INSTALLATION DETAIL

N.T.S.

3'x3'x3' I.D. MANHOLE
4'x4'x4' EXTERNAL DIMENSIONS

CHASE STANDARD - 3,900 Lbs
MUST MEET OR EXCEED ALL STATE, LOCAL D.O.T. REGULATIONS FOR ROADWAY LOADINGS

N.T.S.

1"= 20 FEET (PRINTED 22X34)
1"= 40 FEET (PRINTED 11X17)

0 20 40 60 80

LEGEND

	ELECTRIC POLE		CATCH BASIN
	JOINT UTILITY POLE	C	CATV HANDHOLE
	LAMP POST		COMM PEDESTAL
	TRAFFIC LIGHT	E	ELECTRIC HANDHOLE
CATV	CATV MANHOLE		FIRE HYDRANT
D	DRAIN MANHOLE	G	GAS GATE
E	ELECTRIC MANHOLE	GM	GAS METER
S	SEWER MANHOLE	IRR	IRRIGATION VALVE
T	TELEPHONE MANHOLE	MB	MAIL BOX
W	WATER MANHOLE		PARKING METER(S)
	POLE ANCHOR GUY	SG	SEWER GATE
	BUSH/SHRUB		SIGN POLE
R/W	RIGHT OF WAY		STEEL POST
	CULVERT		STONE BOUND
	FENCE		STREET LIGHT
	GUARD RAIL	T	TEL HANDHOLE
ELEC VAULT	ELECTRIC VAULT		TRANSFORMER
TRAF HH	TRAFFIC HANDHOLE		UG CABLE MARKER
	PROPOSED HANDHOLE	WG	WATER GATE
	PROPOSED CONDUIT	WM	WATER METER

NOTE:
EXISTING UTILITIES SHOWN ARE APPROXIMATE AND NOT WARRANTED TO BE CORRECT. THE CONTRACTOR SHALL VERIFY THE LOCATION OF ALL PUBLIC AND PRIVATE UTILITIES PRIOR TO BEGINNING ANY EXCAVATION.

CALL BEFORE YOU DIG
UNDERGROUND SERVICE ALERT
72 HOURS NOTICE REQUIRED.
ENTER 1-888-DIG-SAFE

PREPARED BY:

PIKE TELECOM
21 Oxford Rd
Mansfield, MA 02048
www.piketelecom.org
1-508-337-7600

PREPARED FOR:

comcast

REV #	DESCRIPTION	DATE

TITLE:

BRAINTREE - 262 FORBES RD
BOSTON, MA
VERIZON - PETITION PLAN

SURVEYED BY: PIKE TELECOM	PRINT NO: 2 OF 2
DRAWN BY: NF	SCALE: AS NOTED
DATE: 11/7/19	AS-BUILT:

12/17/2019 N:\CADD\CONCAST\FORBESBRAINTREE\Braintree 262 Forbes RdPPA\BRA\A4 AUTOCAD\262 FORBES RD PPLAN B\ACE.dwg

Charles C. Kokoros, Mayor

BRAINTREE DEPARTMENT OF PUBLIC WORKS

Engineering Division
Robert P. Campbell, PE, PTOE, Town Engineer
rcampbell@braintreema.gov
John J. Morse, Assistant Town Engineer
jmorse@braintreema.gov

Memo

Date: March 11, 2020
To: Susan M. Cimino, Clerk of the Council
From: Bob Campbell
CC: Jim Arsenault, Ben Hulke
RE: Street Opening Petition, 20-023 Liberty St and Proctor Road
****

The DPW has reviewed the subject petition for the street opening location and has the following recommendations:

20-023 – Install and maintain approximately 3145 feet of 6 inch 60 psig plastic gas main in Liberty Street from the existing 6 inch 60 psig plastic service at 1024 Liberty Street to the existing 6 inch 60 psig main at Christina Drive and including a 4 inch 60 psig connection at Peach Street, a 3 inch 60 psig connection at Forest Street and a 2 inch 60 psig connection plus test station and anodes at Sycamore Road, and also to install and maintain 1420 feet of 2 inch 60 psig plastic gas main in Proctor Road, all to replace older mains and service the users along the route. Neither Liberty Street nor Proctor Road is under the moratorium, these sections of Liberty Street having been reconstructed in 2003 and 2005 and Proctor Road having been reconstructed in 2003, but both are in fairly good condition. Both of these sections are on the draft Roadway and Infrastructure Program for pavement preservation, Proctor Road in 2021 and Liberty Street in 2023. Since neither street is under the moratorium, I recommend that the petition be granted under the normal conditions with emphasis on the following:

- That the work be done expeditiously so not to interfere with the planned Town work;
- That the new mains not occupy any part of the trenches now occupied by the existing water or sewer mains;
- that the mains to be abandoned be removed;
- that after maintaining the 4" minimum* pavement depth temporary trenches from both the installations and the removals through one winter, but within one year of placement of the temporary trench repair, that the permanent repair be a grind and inlay with a minimum 1 foot overlap of the adjacent pavement 1 ½ inches deep of both trenches and of each service trench within the limits of the gas work;
- That any curbs or sidewalks or other features disturbed shall be repaired to the satisfaction of the DPW;
- "Neither National Grid nor any contractor is authorized to close any street or to close a direction of travel to facilitate their work without authorization from the Director of the Department of Public Works or the Highway Superintendent. The Chief of Police can also authorize a closure for a police or fire

emergency. Construction zone traffic safety issues are to be addressed by using appropriate traffic control signs and devices and the use of trained traffic control personnel to safely guide traffic through the work zone. If a closure is authorized by the DPW, it shall not be implemented until signs and traffic control officers (where needed) are properly in place in conformity with the written plan prepared by the contractor's engineer and approved by the DPW and the Police Department."

* 4" depth is to be constructed at all locations where the existing pavement depth is 4" or less. At all other locations the thickness of the pavement depth placed shall match the existing pavement thickness. Pavement shall be placed and compacted in courses not to exceed 2 ½ inches.

Bob Campbell, Town Engineer

150 Potter Road
Braintree, MA 02184
www.beld.com
781.348.BELD
781.348.1003 fax

Date: 2/20/20

Ms. Susan Cimino
One JFK Memorial Drive
Braintree, Ma 02184

Dear Ms. Cimino,

National Grid: Petition # 20-023

The proposed plan and scope of work does not impact existing BELD electric or communication utilities within this site.

The Engineering Department has no objection for approval being granted to this permit.

Sincerely,

Darron MacDonald
Field Engineer
Office: 781.348-1072
Cell: 339-235-6450

- **PRESSURE GAUGES ARE REQUIRED AT ALL MAINS FOR ALL TIE-INS. REFER TO GCON-02001 PROCEDURE.**
- **CHECK ELECTRONIC MAPPING SYSTEM FOR MOST CURRENT MAPPING INFORMATION.**

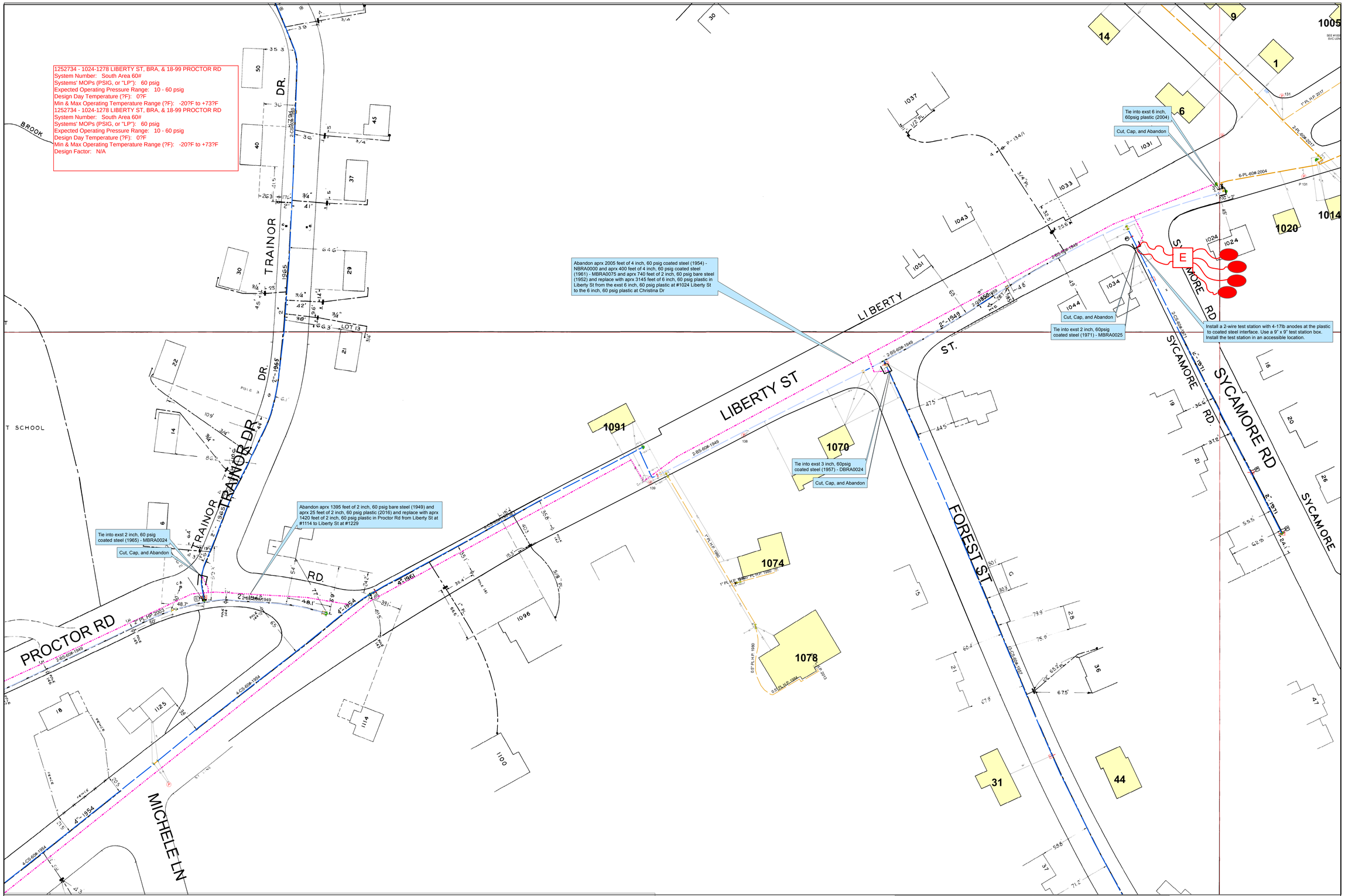

ENGINEERING DESIGN - Proposed Scope of Work

1024-1278 LIBERTY ST, BRA, & 18-99 PROCTOR RD

As part of the BSMNRPL Program, Main and Service Replacement recommends the relay o
--> aprx 2005 feet of 4 inch, 60 psig coated steel (1954) - NBRA0000 and aprx 400 feet of 4 inch, 60 psig coated steel (1961) - MBRA0075 and aprx 740 feet of 2 inch, 60 psig bare steel (1952) with aprx 3145 feet of 6 inch, 60 psig plastic in Liberty St from the exst 6 inch, 60 psig plastic at #1024 Liberty St to the 6 inch, 60 psig plastic at Christina Dr,
--> aprx 1395 feet of 2 inch, 60 psig bare steel (1949) and aprx 25 feet of 2 inch, 60 psig plastic (2016) with aprx 1420 feet of 2 inch, 60 psig plastic in Proctor Rd from Liberty St at #1114 to Liberty St at #1229

N

60 30 0 60 Feet

NOTE: The location of surface and underground objects shown are not warranted to be correct.

ENGINEER	GRLOGUE	SIZE	2/6 inch
DATE	**9/12/2019**	MATERIAL	PL
LENGTH	2" = 1420 Feet 6" = 3195 Feet	PRESSURE	60 psig
SECTIONALS	BRAU1513	WORK ORDER #	1252734
	BRAU1523		

ArcFM

nationalgrid

- **PRESSURE GAUGES ARE REQUIRED AT ALL MAINS FOR ALL TIE-INS. REFER TO GCON-02001 PROCEDURE.**
- **CHECK ELECTRONIC MAPPING SYSTEM FOR MOST CURRENT MAPPING INFORMATION.**

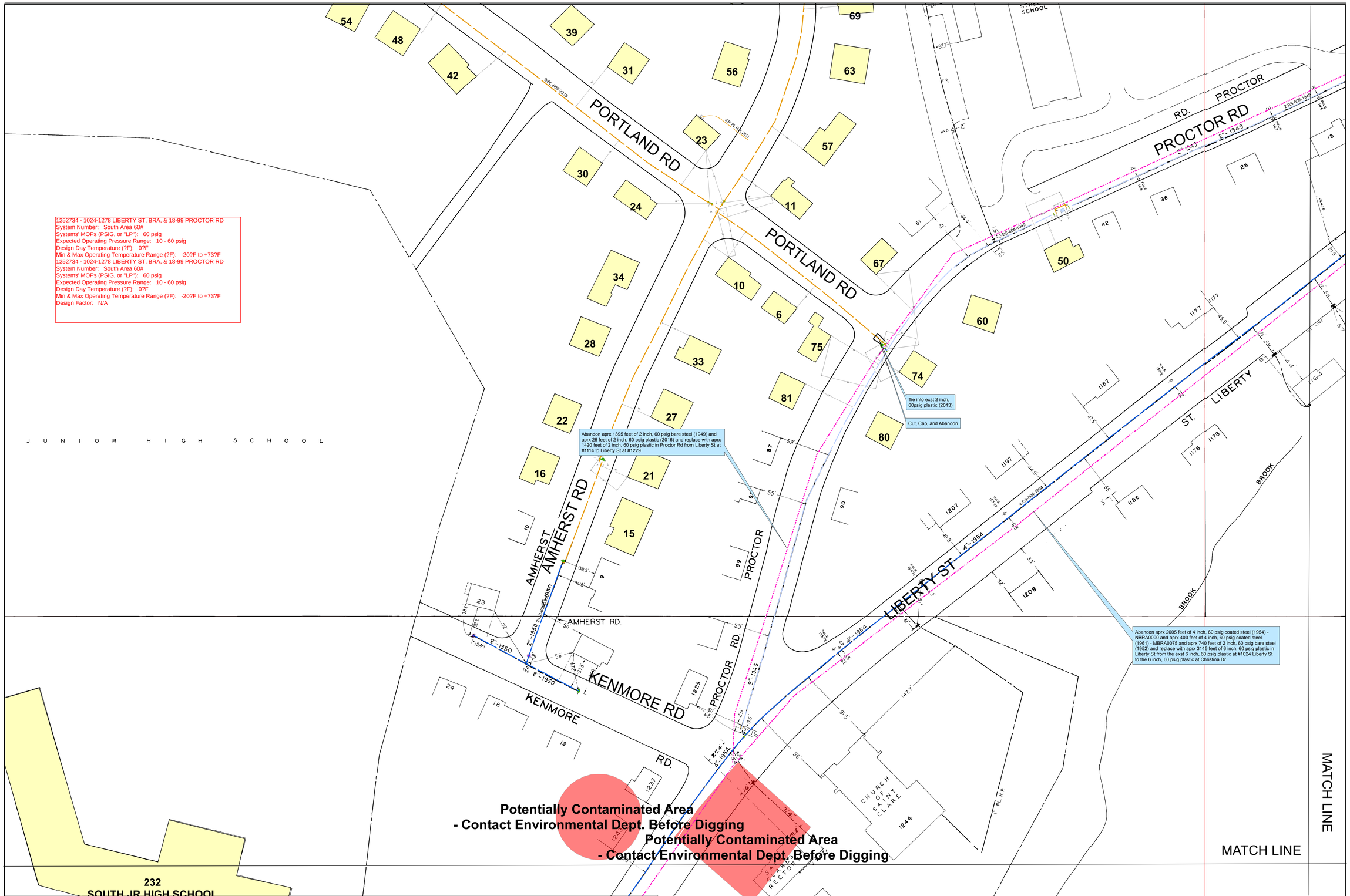

ENGINEERING DESIGN - Proposed Scope of Work

1024-1278 LIBERTY ST, BRA, & 18-99 PROCTOR RD

As part of the BSMNRPL Program, Main and Service Replacement recommends the relay o
--> aprx 2005 feet of 4 inch, 60 psig coated steel (1954) - NBRA0000 and aprx 400 feet of 4 inch, 60 psig coated steel (1961) - MBRA0075 and aprx 740 feet of 2 inch, 60 psig bare steel (1952) with aprx 3145 feet of 6 inch, 60 psig plastic in Liberty St from the exst 6 inch, 60 psig plastic at #1024 Liberty St to the 6 inch, 60 psig plastic at Christina Dr,
--> aprx 1395 feet of 2 inch, 60 psig bare steel (1949) and aprx 25 feet of 2 inch, 60 psig plastic (2016) with aprx 1420 feet of 2 inch, 60 psig plastic in Proctor Rd from Liberty St at #1114 to Liberty St at #1229

N

60 30 0 60 Feet

NOTE: The location of surface and underground objects shown are not warranted to be correct.

ENGINEER	GRLOGUE	SIZE	2/6 inch
DATE	**9/13/2019**	MATERIAL	PL
LENGTH	2" = 1420 Feet 6" = 3195 Feet	PRESSURE	60 psig
SECTIONALS	BRAU1523	WORK ORDER #	1252734
	BRAU1522		
	BRAU1532		

ArcFM

nationalgrid

- **PRESSURE GAUGES ARE REQUIRED AT ALL MAINS FOR ALL TIE-INS. REFER TO GCON-02001 PROCEDURE.**
- **CHECK ELECTRONIC MAPPING SYSTEM FOR MOST CURRENT MAPPING INFORMATION.**

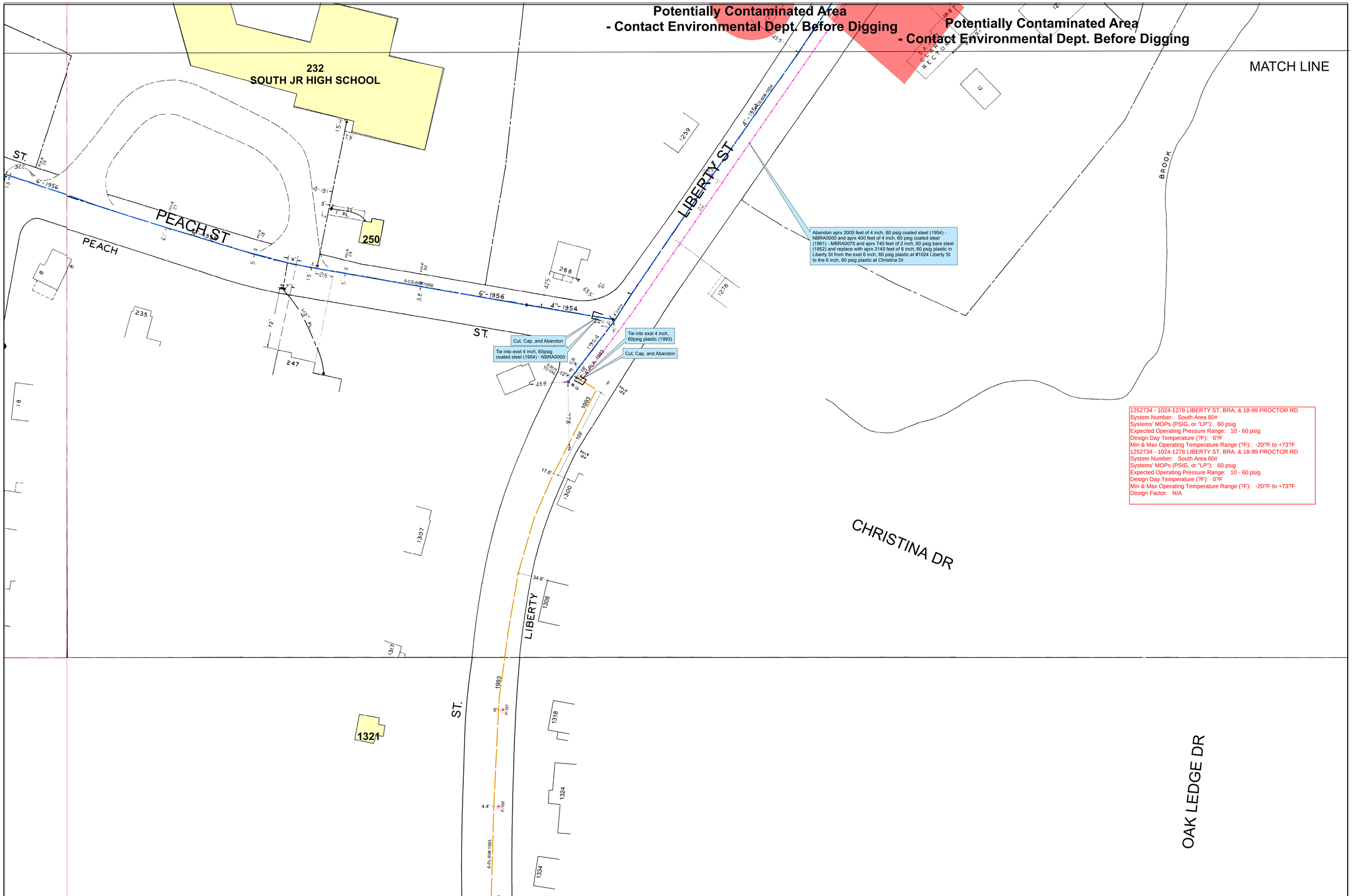

ENGINEERING DESIGN - Proposed Scope of Work

1024-1278 LIBERTY ST, BRA, & 18-99 PROCTOR RD

As part of the BSMNRPL Program, Main and Service Replacement recommends the relay o
--> aprx 2005 feet of 4 inch, 60 psig coated steel (1954) - NBRA0000 and aprx 400 feet of 4 inch, 60 psig coated steel (1961) - MBRA0075 and aprx 740 feet of 2 inch, 60 psig bare steel (1952) with aprx 3145 feet of 6 inch, 60 psig plastic in Liberty St from the exst 6 inch, 60 psig plastic at #1024 Liberty St to the 6 inch, 60 psig plastic at Christina Dr,
--> aprx 1395 feet of 2 inch, 60 psig bare steel (1949) and aprx 25 feet of 2 inch, 60 psig plastic (2016) with aprx 1420 feet of 2 inch, 60 psig plastic in Proctor Rd from Liberty St at #1114 to Liberty St at #1229

N

60 30 0 60 Feet

NOTE: The location of surface and underground objects shown are not warranted to be correct.

ENGINEER	GRLOGUE	SIZE	2/6 inch
DATE	**9/13/2019**	MATERIAL	PL
LENGTH	2" = 1420 Feet 6" = 3195 Feet	PRESSURE	60 psig
SECTIONALS	BRAU1532	WORK ORDER #	1252734

ArcFM

nationalgrid

PETITION OF NATIONAL GRID FOR GAS MAIN LOCATIONS

#20-023

Town of Braintree / Town Council:

The Nationalgrid hereby respectfully requests your consent to the locations of mains as hereinafter described for the transmission and distribution of gas in and under the following public streets, lanes, highways and places of the **Town of Braintree** and of the pipes, valves, governors, manholes and other structures, fixtures and appurtenances designed or intended to protect or operate said mains and accomplish the objects of said Company; and the digging up and opening the ground to lay or place same:

To install and maintain approximately 3195 feet more or less of 6 inch 60 psig plastic gas main in Liberty St., Braintree. From the existing 6 inch 60 psig plastic gas main (2004) near house #1024 southwesterly to the existing 6 inch 60 psig gas main (1993) just past Peach St. at pole #163 on Liberty St. and approximately 1420 feet more or less of 2 inch 60 psig plastic gas main in Proctor Rd. from the new 6 inch 60 psig plastic gas main in Liberty St. near #1114 to the new 6 inch 60 psig plastic gas main near #1244 Liberty St. To replace the existing 4 inch and 2 inch 60 psig bare steel gas main (1954) in Liberty St. and the 2 inch 60 psig coated steel gas main (1949) in Proctor Rd.

January 29, 2020

By: Barbara H. Kelleher
Barbara H. Kelleher
Permit Representative

Town of Braintree / Town Council:

IT IS HEREBY ORDERED that the locations of the mains of the Nationalgrid for the transmission and distribution of gas in and under the public streets, lanes, highways and places of the **Town of Braintree** substantially as described in the petition date **January 29, 2020** attached hereto and hereby made a part hereof, and of the pipes, valves, governors, manholes and other structures, fixtures and appurtenances designed or intended to protect or operate said mains and/or accomplish the objects of said Company, and the digging up and opening the ground to lay or place same, are hereby consented to and approved.

The said Nationalgrid shall comply with all applicable provisions of law and ordinances of the **Town of Braintree** applicable to the enjoyment of said locations and rights.

Date this _____ day of _____, 20____.
I hereby certify that the foregoing order was duly adopted by the _____ of the Town of _____, MA on the _____ day of _____, 20____.

By: _____

_____
Title

WO# 1252734

Return Original to Permit Section
National Grid
40 Sylvan Rd, Waltham, MA 02451
Retain Duplicate for your Records

RECEIVED TOWN CLERK
BRAINTREE, MA
2020 FEB 12 AM 9:32

#20-023

Office of the Board of Assessors

One JFK Memorial Drive
Braintree, Massachusetts 02184
Telephone: (781) 794-8050 • Fax: (781) 794-8068

Charles C. Kokoros
Mayor

Robert Brinkmann
Deputy Assessor

Board of Assessors
Robert Cusack
Chair
Susan O'Brien
Vice Chair
Robert Connolly

DATE:	February 3, 2020
APPLICANT:	National Grid
ADDRESS:	Various
MAP & LOT:	Various

This is to certify that at the time of submission of this form to the Board of Assessors, the names and addresses of the parties assessed as adjoining owners to the parcel of land shown and described are as written and are the parties according to the records of the Assessors.

Office of the Board of Assessors E.S.

Robert M Cusack
Chairman

RECEIVED TOWN CLERK
BRAINTREE, MA
2020 FEB 12 AM 9:32

Braintree
Abutters List

Subject Parcel ID:

Subject Property Location:

ParcelID	Location	Owner	Co-Owner	Mailing Address	City	State	Zip
1088 0 2A	1307 LIBERTY ST	GHILONI JAMES F	GHILONI MATTHEW JTS	1307 LIBERTY ST	BRAINTREE	MA	02184
1088 0 2B	1311 LIBERTY ST	MARKS JOAN L		1311 LIBERTY STREET	BRAINTREE	MA	02184
1088 0 3C	247 PEACH ST	DUNN MICHAEL	DUNN NANCY WARREN T	247 PEACH ST	BRAINTREE	MA	02184
1088 0 3F	269 PEACH ST	THOMPSON PETER I	c/o P I T PIPE INC	1599 WASHINGTON ST #201	BRAINTREE	MA	02184
1098 0 1	268 PEACH ST	VARRASO STEPHEN A	VARRASO LOIS TBYE	268 PEACH ST	BRAINTREE	MA	02184
1098 0 10	1229 LIBERTY ST	NAQVI SEYED M	REHMAM ANAM JTS	1229 LIBERTY ST	BRAINTREE	MA	02184
1098 0 11	1223 LIBERTY ST	LAI STEVE K	LAI ALICE YI TBYE	1223 LIBERTY STREET	BRAINTREE	MA	02184
1098 0 12	99 PROCTOR RD	CALLAHAN WILLIAM FRANCIS JR	CALLAHAN SUSAN E	99 PROCTOR RD	BRAINTREE	MA	02184
1098 0 13	93 PROCTOR RD	DONAHUE JOSEPH B JR	DONAHUE PATRICIA M	93 PROCTOR ROAD	BRAINTREE	MA	02184
1098 0 14	87 PROCTOR RD	PLUMMER THOMAS E LE TR	PLUMMER EDWARD S TR	87 PROCTOR RD	BRAINTREE	MA	02184
1098 0 15	81 PROCTOR RD	CRUZ CHRISSY O		81 PROCTOR RD	BRAINTREE	MA	02184
1098 0 17	67 PROCTOR RD	TAN XIUNA E	TAN RUI C TBYE	67 PROCTOR RD	BRAINTREE	MA	02184
1098 0 18	61 PROCTOR RD	O`NEIL SHAWN M	O`NEIL AMY TBYE	61 PROCTOR ROAD	BRAINTREE	MA	02184
1098 0 1A	1275 LIBERTY ST	CULLINANE GARY D	CULLINANE LANITA D	1275 LIBERTY ST	BRAINTREE	MA	00000
1098 0 1D	1251 LIBERTY ST	CUSHING MICHAEL V		1251 LIBERTY ST	BRAINTREE	MA	02184
1098 0 1E	1259 LIBERTY ST	LIN YING	LIN ZHONG CHUAN TBYE	1259 LIBERTY ST	BRAINTREE	MA	02184
1098 0 1F	1265 LIBERTY ST	COTTER MICHAEL J	COTTER KATHY B TBYE	1265 LIBERTY ST	BRAINTREE	MA	02184
1098 0 1G	250 PEACH ST	BRAINTREE TOWN OF	SCHOOL DEPT	TOWN HALL	BRAINTREE	MA	02184
1098 0 26	11 KENMORE RD	MACEACHERN JAMES/ELEANOR T	MACEACHERN FAMILY TR	11 KENMORE RD	BRAINTREE	MA	02184
1098 0 27	12 KENMORE RD	BURKE SEAN	BURKE ALISON TBYE	12 KENMORE ROAD	BRAINTREE	MA	02184
1098 0 3	49 PROCTOR RD	BRAINTREE TOWN OF	SCHOOL DEPT	TOWN HALL	BRAINTREE	MA	02184
1098 0 5C	6 TRAINOR DR	ZALL GREGORY	ZALL LAURA F TBYE	6 TRAINOR DR	BRAINTREE	MA	02184
1098 0 5D	14 TRAINOR DR	FOLEY JONATHAN M	FOLEY JILL K TBYE	14 TRAINOR DRIVE	BRAINTREE	MA	02184
1098 0 5E	22 TRAINOR DR	CONNORS TERESA ANN		22 TRAINOR DR	BRAINTREE	MA	02184
1098 0 5H	21 TRAINOR DR	GREATHEAD HERBERT P	DOW KELLI A	21 TRAINOR DRIVE	BRAINTREE	MA	02184
1098 0 5L	11 TRAINOR DR	GIANNINO PAUL J	GIANNINO SANTINA	11 TRAINOR DR.	BRAINTREE	MA	02184
1098 0 5M	1107 LIBERTY ST	WONG SIU	CHAU EASON TBYE	1107 LIBERTY STREET	BRAINTREE	MA	02184
1098 0 61A	60 PROCTOR RD	FRAZIER KENT C	FRAZIER PATRICIA T	60 PROCTOR ROAD	BRAINTREE	MA	02184
1098 0 61B	50 PROCTOR RD	HUYNH THUONG		50 PROCTOR ROAD	BRAINTREE	MA	02184
1098 0 61E	42 PROCTOR RD	YORDANOV ROSTISLAV D	NIKOLAEVA NADEZHDA TBY	42 PROCTOR ROAD	BRAINTREE	MA	02184
1098 0 61G	36 PROCTOR RD	IVANOV MIROSLAV T	DOBRINOVA GERGANA G T	36 PROCTOR RD	BRAINTREE	MA	02184
1098 0 61H	1177 LIBERTY ST	KAMEL MAGED	ABD MANAL TBYE	1177 LIBERTY ST	BRAINTREE	MA	02184
1098 0 61I	1187 LIBERTY ST	MCCARTHY JOANNE M		1187 LIBERTY ST	BRAINTREE	MA	02184
1098 0 61J	1197 LIBERTY ST	FREEMAN RICHARD M	HSU HUI-LING TBYE	1197 LIBERTY ST	BRAINTREE	MA	02184
1098 0 61K	1207 LIBERTY ST	MCNEIL BRIAN K	MCNEIL NOREEN B TBYE	1207 LIBERTY ST	BRAINTREE	MA	02184
1098 0 61L	90 PROCTOR RD	TU HAW CHYUAN & PHELMA TR	HAW C TU AND PHELMA TU	90 PROCTOR RD	BRAINTREE	MA	02184
1098 0 61M	80 PROCTOR RD	MACDONALD TIMOTHY	MACDONALD MARYANNE P	80 PROCTOR RD	BRAINTREE	MA	02184
1098 0 61N	74 PROCTOR RD	RYAN ROBERT T	GALASSO EILEEN A JTS	74 PROCTOR ROAD	BRAINTREE	MA	02184
1098 0 61O	1178 LIBERTY ST	CHAU EASON	WONG SIU TBYE	1107 LIBERTY ST	BRAINTREE	MA	02184
1098 0 61P	1188 LIBERTY ST	NGUYEN SANG VAN	TRAN H TAM TBYE	1188 LIBERTY ST	BRAINTREE	MA	02184

2020 FEB 12 AM 9:32
BRAINTREE, MA
RECEIVED TOWN CLERK

#20-023

Braintree
Abutters List

Subject Parcel ID:

Subject Property Location:

ParcelID	Location	Owner	Co-Owner	Mailing Address	City	State	Zip
1098 0 61Q	1200 LIBERTY ST	BURKE JOHN	BURKE ABIGAIL TBYE	1200 LIBERTY ST	BRAINTREE	MA	02184
1098 0 61R	1208 LIBERTY ST	STRAZDAS JOHN P/VALERIE A TR	STRAZDAS LIBERTY ST TR	1208 LIBERTY STREET	BRAINTREE	MA	02184
1098 0 62A	1125 LIBERTY ST	KWONG SANDY MO		1125 LIBERTY ST	BRAINTREE	MA	02184
1098 0 62B	18 PROCTOR RD	MAURO PATRICIA L		18 PROCTOR RD	BRAINTREE	MA	02184
1098 0 62C	28 PROCTOR RD	BURNS FRANCIS S	BURNS GAIL M	28 PROCTOR ROAD	BRAINTREE	MA	02184
1098 0 8	1243 LIBERTY ST	BROWN TINA L		1243 LIBERTY STREET	BRAINTREE	MMA	02184
1098 0 9	1237 LIBERTY ST	NGUYEN LILLIE	NGUYEN LONG TBYE	1237 LIBERTY STREET	BRAINTREE	MA	02184
1105 0 13	9 HICKORY RD	CHRISTIAN HOWARD J	CHRISTIAN DIANA L	9 HICKORY ROAD	BRAINTREE	MA	02184
1105 0 13E	14 HICKORY RD	GRIFFEN ROBERT D	GRIFFEN JOANNE M	14 HICKORY RD	BRAINTREE	MA	02184
1105 0 14	1031 LIBERTY ST	CONTRINO JOSEPH P		1031 LIBERTY ST	BRAINTREE	MA	02184
1105 0 15	1033 LIBERTY ST	SINGH HARSIMRANJEET	KAUR KOMALDEEP TBYE	1033 LIBERTY ST	BRAINTREE	MA	02184
1105 0 16	1043 LIBERTY ST	KWAN SHUN C / RUI HUA /	CHOR CHI	1043 LIBERTY ST	BRAINTRE	MA	02184
1105 0 16B	1037 LIBERTY ST	JIN SHENGHUA		1037 LIBERTY STREET	BRAINTREE	MA	02184
1105 0 17	1057 LIBERTY ST	LIU YU QING	HUANG BAO QING TBYE	1057 LIBERTY ST	BRAINTREE	MA	02184
1105 0 19A	1091 LIBERTY ST	LEOTSAKOS ANTHONY	LEOTSAKOS NIKI TBYE	1091 LIBERTY ST	BRAINTREE	MA	02184
1105 0 19B	1085 LIBERTY ST	NOVO MIGUEL A JR	NOVO GENEVIEVE M	1085 LIBERTY ST	BRAINTREE	MA	02184
1105 0 19C	1075 LIBERTY ST	KAVALAPARA ANAND	BALACHANDRAN VIDHYA T	1075 LIBERTY ST	BRAINTREE	MA	02184
1105 0 19D	1065 LIBERTY ST	HO WAI MING	MEI KELLY Y TBYE	1065 LIBERTY ST	BRAINTREE	MA	02184
1105 0 19I	1099 LIBERTY ST	ZHENG XUELIN	CHEN QINLEI TBYE	1099 LIBERTY ST	BRAINTREE	MA	02184
1105 0 21	1005 LIBERTY ST	ABRAHAM ABRAHAM B	FARES JOSIAN M TBYE	1005 LIBERTY STREET	BRAINTREE	MA	02184
1105 0 22	1 HICKORY RD	DUDLEY GRAHAM	DUDLEY JESSICA TBYE	1 HICKORY RD	BRAINTREE	MA	02184
1105 0 23	6 HICKORY RD	ZHEN JU QUEN		6 HICKORY RD	BRAINTREE	MA	02184
1106 0 2	1228 1244 LIBERTY ST	ROMAN CATHOLIC ARCHBISHOP	OF BOSTON	1244 LIBERTY ST	BRAINTREE	MA	02184
1106 0 3	1276 LIBERTY ST	BURNS COLIN G		1276 LIBERTY STREET	BRAINTREE	MA	02184
1106 0 3A	1286 LIBERTY ST	KASHI SID S	DEHMAND SHARON TBYE	1286 LIBERTY STREET	BRAINTREE	MA	02184
1106 0 4D	1300 LIBERTY ST	GOWEN SEAN W	GOWEN VIRGINIA M TBYE	1300 LIBERTY ST	BRAINTREE	MA	02184
1106 0 4F	1308 LIBERTY ST	BRENNAN BARBARA E/ DONNA T	BARBARA E BRENNAN TRU	1308 LIBERTY ST	BRAINTREE	MA	02184
1108 0 10	14 MICHELE LN	FAHERTY ROBERT P	FAHERTY NATALIE J	14 MICHELE LANE	BRAINTREE	MA	02184
1108 0 1A	1114 LIBERTY ST	FIELD PHYLLIS J TRUSTEE	THE FIELD IRREVOCABLE T	1108 LIBERTY STREET	BRAINTREE	MA	02184
1108 0 1B	1108 LIBERTY ST	FIELD PHYLLIS J TR THE	FIELD FAMILY IRREVOCABL	1108 LIBERTY ST	BRAINTREE	MA	02184
1108 0 2	1070 LIBERTY ST	MAKUCHA IRINA		1070 LIBERTY ST	BRAINTREE	MA	02184
1108 0 2A	1094 LIBERTY ST	BATTISTA MARY ANNE		1094 LIBERTY ST	BRAINTREE	MA	02184
1108 0 2B	1096 LIBERTY ST	SANFILIPPO CHARLES		1096 LIBERTY ST	BRAINTREE	MA	02184
1108 0 2M	1074 LIBERTY ST	SCHULTZ SHIRLEY J TRS	SCHULTZ JOHN R TRS	1074 LIBERTY ST	BRAINTREE	MA	02184
1108 0 2P	1100 LIBERTY ST	CLOUGHERTY CAROLYN C		1100 LIBERTY ST	BRAINTREE	MA	02184
1108 0 39	19 MICHELE LN	COREY SAMUEL	COREY THERESA R TBYE	19 MICHELE LANE	BRAINTREE	MA	02184
1108 0 40	1154 LIBERTY ST	MCGARTY MICHAEL G	MCGARTY SHARON L TBY	1154 LIBERTY STREET	BRAINTREE	MA	02184
1108 0 41	1164 LIBERTY ST	BARRETTO ROBERT N	BARRETTO ANNE M	1164 LIBERTY ST	BRAINTREE	MA	02184
1108 0 8	1124 LIBERTY ST	TROY MARK D	TROY LISA A TBYE	1124 LIBERTY ST	BRAINTREE	MA	02184
1108 0 9	1134 LIBERTY ST	VINFEN CORPORATION		950 CAMBRIDGE STREET	CAMBRIDGE	MA	02141-1001

2020 FEB 12 AM 9:32
TOWN CLERK
BRAINTREE, MA
RECEIVED

#20-023

Subject Parcel ID:

Subject Property Location:

ParcelID	Location	Owner	Co-Owner	Mailing Address	City	State	Zip
1109 0 51	60 THETFORD AV	HIGGINS THOMAS J JR	HIGGINS PAMELA E	60 THETFORD AV	BRAINTREE	MA	02184
1109 0 5E	1014 LIBERTY ST	GELLER AARON		1014 LIBERTY ST	BRAINTREE	MA	02184
1109 0 5F	1020 LIBERTY ST	LIU CHEN	DANG YIFAN TBYE	1020 LIBERTY ST	BRAINTREE	MA	02184
1109 0 5G	1024 LIBERTY ST	GIBLIN GERALD F	GIBLIN JOAN M	1024 LIBERTY STREET	BRAINTREE	MA	02184
1109 0 5J	1044 LIBERTY ST	KOSTOVA YOULIA	BUHECKER CHARLES TBY	1044 LIBERTY ST	BRAINTREE	MA	02184
1109 0 5M	19 SYCAMORE RD	RONAN-ANTONELLI DEBRA L	ANTONELLI REAY A TBYE	19 SYCAMORE RD	BRAINTREE	MA	02184
1109 0 5P	16 SYCAMORE RD	FENNELL DECLAN	FENNELL CORINNE TBYE	16 SYCAMORE RD	BRAINTREE	MA	02184
1109 0 6A	1006 LIBERTY ST	MCISAAC EUGENE K	MCISAAC LINDA A	1006 LIBERTY STREET	BRAINTREE	MA	02184

Parcel Count: **88**

End of Report

RECEIVED TOWN CLERK
BRAINTREE, MA
2020 FEB 12 AM 9:32

#20-023

Charles C. Kokoros, Mayor

BRAINTREE DEPARTMENT OF PUBLIC WORKS

Engineering Division
Robert P. Campbell, PE, PTOE, Town Engineer
rcampbell@braintreema.gov
John J. Morse, Assistant Town Engineer
jmorse@braintreema.gov

Memo

Date: March 9, 2020
To: Susan M. Cimino, Clerk of the Council
From: Bob Campbell
CC: Jim Arsenault, Ben Hulke
RE: Street Opening Petition, 20-024 Stonewood Lane and Birchcroft Road
****

The DPW has reviewed the subject petition for the street opening location and has the following recommendations:

20-024 – Install and maintain approximately 210 feet of 2 inch 60 psig plastic gas main in Birchcroft Road from the existing 2 inch plastic to the end of main at house #59, and to install and maintain approximately 540 feet of 2 inch 60 psig plastic gas main in Stonewood Lane from the new 2 inch in Birchcroft Road to the end of main at #11 to replace older mains and service the users along the route. Both Birchcroft Road and Stonewood Lane are under the moratorium enacted by the Town in 2015 having been shimmed and microsurfaced in 2017. For longitudinal trenches in a road resurfaced as these roads were the moratorium is 10 years. Road openings may be made after 2027 without waiving the ordinance. Since the street is under the moratorium, I recommend that the petition not be granted. However, if the Council finds extenuating circumstances and there is no viable option to safely maintain gas utility service, I would recommend that the petition for this road opening only be granted under the normal conditions, with emphasis on the new main not occupying any part of the trench now occupied by the existing water mains, and also on the following conditions:

- That the main and services be placed lower than normal in the Birchcroft / Stonewood intersection area and that the repair paving be deeper to accommodate a future lowering of the roadway (to offset the effects of a previous overlay by Algonquin which residents complain has caused short term puddles to form where their driveways and walkways meet the roadside.)
- That the existing mains being replaced be removed;
- that after maintaining the temporary trench through one winter but within one year of placement of the temporary trench repair, the permanent repair be full-width mill and overlay of both roadways within the limits of the gas work with deeper milling in the intersection area, depths to be determined by the DPW Engineering Division.

- That any curbs or sidewalks or other features disturbed shall be repaired to the satisfaction of the DPW;
- "Neither National Grid nor any contractor is authorized to close any street or to close a direction of travel to facilitate their work without authorization from the Director of the Department of Public Works or the Highway Superintendent. The Chief of Police can also authorize a closure for a police or fire emergency. Construction zone traffic safety issues are to be addressed by using appropriate traffic control signs and devices and the use of trained traffic control personnel to safely guide traffic through the work zone. If a closure is authorized by the DPW, it shall not be implemented until signs and traffic control officers (where needed) are properly in place in conformity with the written plan prepared by the contractor's engineer and approved by the DPW and the Police Department."

Bob Campbell
Town Engineer

150 Potter Road
Braintree, MA 02184
www.beld.com
781.348.BELD
781.348.1003 fax

Date: 2/13/20

Ms. Susan Cimino
One JFK Memorial Drive
Braintree, Ma 02184

Dear Ms. Cimino,

National Grid: Petition # 20-024

The proposed plan and scope of work does not impact existing BELD electric or communication utilities within this site.

The Engineering Department has no objection for approval being granted to this permit.

Sincerely,

Darron MacDonald
Field Engineer
Office: 781.348-1072
Cell: 339-235-6450

PETITION OF NATIONAL GRID FOR GAS MAIN LOCATIONS

#20-024

Town of Braintree / Town Council:

The Nationalgrid hereby respectfully requests your consent to the locations of mains as hereinafter described for the transmission and distribution of gas in and under the following public streets, lanes, highways and places of the **Town of Braintree** and of the pipes, valves, governors, manholes and other structures, fixtures and appurtenances designed or intended to protect or operate said mains and accomplish the objects of said Company; and the digging up and opening the ground to lay or place same:

To install and maintain approximately 210 feet more or less of 2 inch 60 psig plastic gas main in Birchcroft Rd., Braintree. From the existing 4 inch 60 psig plastic gas main (2005) near house #44 to the end of main at #59 Birchcroft Rd, and approximately 540 feet more or less of 2 inch 60 psig plastic gas main on Stonewood Ln. from the new 2 inch 60 psig plastc gas main in Birchcroft Rd. to the end of main in #11 Stonewood Ln. To replace the existing 2 inch 60 psig bare steel (1941), the 2 inch 60psig plastic gas main (1972) in Birchcroft Rd. and the 2 inch 60 psig bare steel gas main (1941) in Stonewood Ln.

January 29, 2020

By: Barbara H. Kelleher
Barbara H. Kelleher
Permit Representative

Town of Braintree / Town Council:

IT IS HEREBY ORDERED that the locations of the mains of the Nationalgrid for the transmission and distribution of gas in and under the public streets, lanes, highways and places of the **Town of Braintree** substantially as described in the petition date **January 29, 2020** attached hereto and hereby made a part hereof, and of the pipes, valves, governors, manholes and other structures, fixtures and appurtenances designed or intended to protect or operate said mains and/or accomplish the objects of said Company, and the digging up and opening the ground to lay or place same, are hereby consented to and approved.

The said Nationalgrid shall comply with all applicable provisions of law and ordinances of the **Town of Braintree** applicable to the enjoyment of said locations and rights.

Date this _____ day of _____, 20____.

I hereby certify that the foregoing order was duly adopted by the _____ of the Town of _____, MA on the _____ day of _____, 20____.

By: _____

_____
Title

RECEIVED TOWN CLERK
BRAINTREE, MA
2020 FEB 12 AM 9:30

WO# 1248839

Return Original to Permit Section
National Grid
40 Sylvan Rd, Waltham, MA 02451
Retain Duplicate for your Records

#20-024

Office of the Board of Assessors

One JFK Memorial Drive
Braintree, Massachusetts 02184
Telephone: (781) 794-8050 • Fax: (781) 794-8068

Charles C. Kokoros
Mayor

Robert Brinkmann
Deputy Assessor

Board of Assessors
Robert Cusack
Chair
Susan O'Brien
Vice Chair
Robert Connolly

DATE:	February 3, 2020
APPLICANT:	National Grid
ADDRESS:	Various
MAP & LOT:	Various

This is to certify that at the time of submission of this form to the Board of Assessors, the names and addresses of the parties assessed as adjoining owners to the parcel of land shown and described are as written and are the parties according to the records of the Assessors.

Office of the Board of Assessors E.S

Robert M Cusack
Chairman

RECEIVED TOWN CLERK
BRAINTREE, MA
2020 FEB 12 AM 9:31

#20-024

Braintree
Abutters List

Subject Parcel ID:

Subject Property Location:

ParcelID	Location	Owner	Co-Owner	Mailing Address	City	State	Zip
3031A 0 11	49 BIRCHCROFT RD	CHAN DAVID		49 BIRCHCROFT RD	BRAINTREE	MA	02184
3031A 0 12	55 BIRCHCROFT RD	BENNETT HALEY	HOOPER CAMERON JTS	55 BIRCHCROFT ROAD	BRAINTREE	MA	02184
3031A 0 13	59 BIRCHCROFT RD	LEE MICHAEL	LEE WING JTS	59 BIRCHCROFT ROAD	BRAINTREE	MA	02184
3031A 0 16	56 STONEWOOD LN	DELANEY DIANA LE	DELANEY STEPHEN/ JAME	56 STONEWOOD LANE	BRAINTREE	MA	02184
3031A 0 17	55 STONEWOOD LN	DELANEY JAMES M	DELANEY PAULA A TBYE	55 STONEWOOD LANE	BRAINTREE	MA	02184
3031A 0 28	11 STONEWOOD LN	SUN RAN	WANG SHUMEI JTS	11 STONEWOOD LN	BRAINTREE	MA	02184
3031A 0 29	17 STONEWOOD LN	WAKELIN ROBERT		17 STONEWOOD LN	BRAINTREE	MA	02184
3031A 0 30	25 STONEWOOD LN	CASEY KEVIN M	CASEY LINN C	25 STONEWOOD LANE	BRAINTREE	MA	02184
3031A 0 31	33 STONEWOOD LN	THIBEAULT JAMES E	THIBEAULT CAITLIN M TBY	33 STONEWOOD LN	BRAINTREE	MA	02184
3031A 0 32	39 STONEWOOD LN	MILLER COURTNEY A		39 STONEWOOD LANE	BRAINTREE	MA	02184
3031A 0 33	45 STONEWOOD LN	CRISPIN DAVID J/ GAIL M TRS	THE FORTY FIVE STONEWC	45 STONEWOOD LANE	BRAINTREE	MA	02184
3031A 0 34	50 STONEWOOD LN	HISLOP MATTHEW M	HISLOP SHERRIE LYNN	50 STONEWOOD LANE	BRAINTREE	MA	02184
3031A 0 35	44 STONEWOOD LN	BURROWS JAMES	CALLIS BRENNA JTS	44 STONEWOOD LANE	BRAINTREE	MA	02184
3031A 0 36	38 STONEWOOD LN	DASILVA JOSE SEBASTIAO		38 STONEWOOD LANE	BRAINTREE	MA	02184
3031A 0 37	34 STONEWOOD LN	HULING PAUL M	HULING ROSEMARIE A	34 STONEWOOD LANE	BRAINTREE	MA	02184
3031A 0 38	24 STONEWOOD LN	BANKS IRREVOCABLE HOME TR	BANKS WILLIAM/COLONNA .	24 STONEWOOD LANE	BRAINTREE	MA	02184

Parcel Count: **16**

End of Report

RECEIVED TOWN CLERK
BRAINTREE, MA
2020 FEB 12 AM 9:31

- **PRESSURE GAUGES ARE REQUIRED AT ALL MAINS FOR ALL TIE-INS. REFER TO GCON-02001 PROCEDURE.**
- **CHECK ELECTRONIC MAPPING SYSTEM FOR MOST CURRENT MAPPING INFORMATION.**

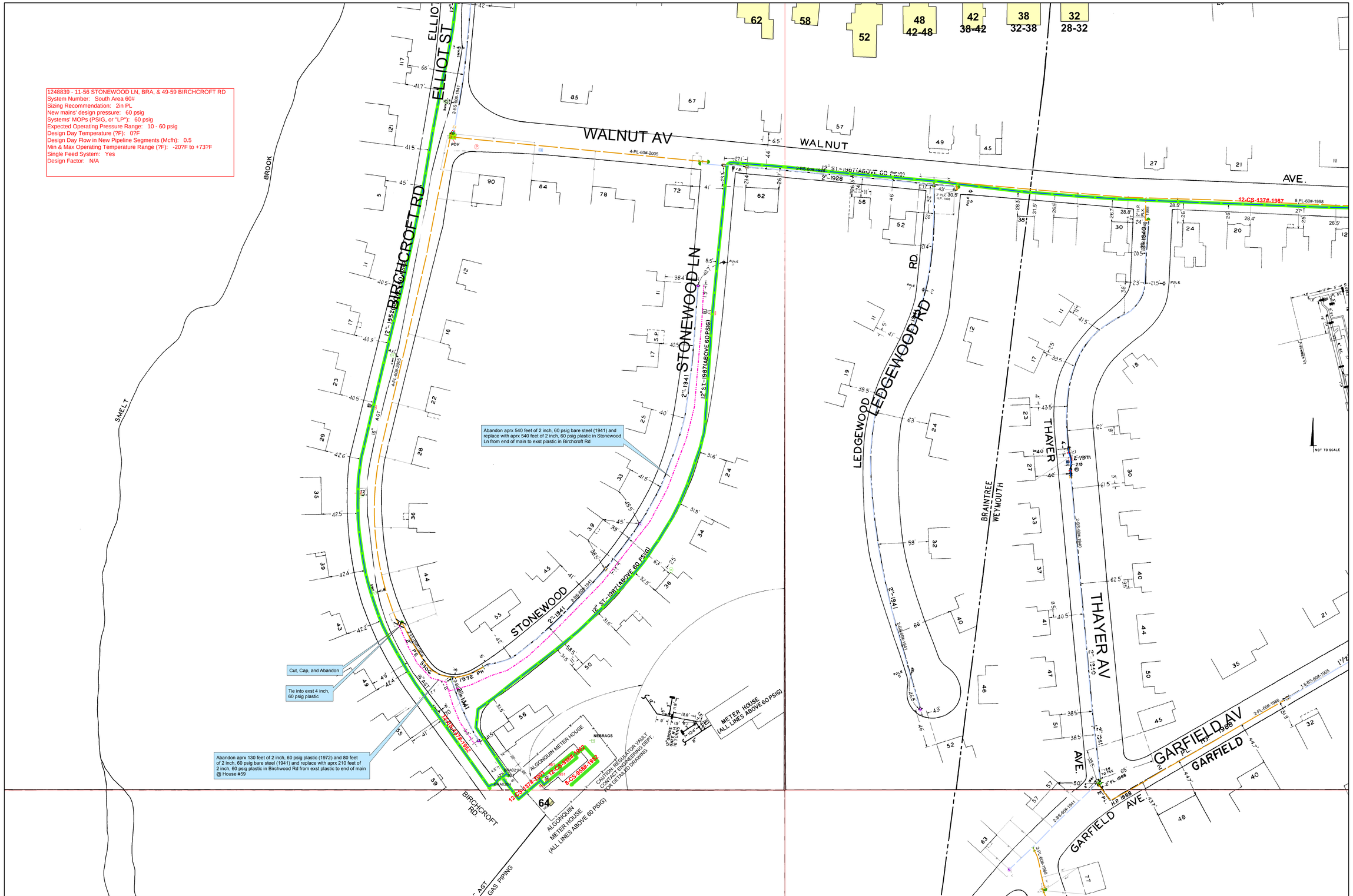

ENGINEERING DESIGN - Proposed Scope of Work

11-56 STONEWOOD LN, BRA, & 49-59 BIRCHCROFT RD

As part of the BSMNRPL Program, Main and Service Replacement recommends the relay of:
--> aprx 540 feet of 2 inch, 60 psig bare steel (1941) with aprx 540 feet of 2 inch, 60 psig plastic in Stonewood Ln from end of main to exst plastic in Birchcroft Rd
--> aprx 130 feet of 2 inch, 60 psig plastic (1972) and 80 feet of 2 inch, 60 psig bare steel (1941) with aprx 210 feet of 2 inch, 60 psig plastic in Birchwood Rd from exst plastic to end of main @ House #59

N

60 30 0 60 Feet

NOTE: The location of surface and underground objects shown are not warranted to be correct.

ENGINEER	GRLOGUE	SIZE	2 inch
DATE	**8/7/2019**	MATERIAL	PL
LENGTH	750 Feet	PRESSURE	60 psig
SECTIONALS	BRAT1526	WORK ORDER #	1248839
	BRAT1527		

ArcFM

nationalgrid

Charles C. Kokoros, Mayor

BRAINTREE DEPARTMENT OF PUBLIC WORKS

Engineering Division
Robert P. Campbell, PE, PTOE, Town Engineer
rcampbell@braintreema.gov
John J. Morse, Assistant Town Engineer
jmorse@braintreema.gov

Memo

Date: March 9, 2020
To: Susan M. Cimino, Clerk of the Council
From: Bob Campbell
CC: Jim Arsenault, Ben Hulke
RE: Street Opening Petition, 20-025 Wynot Road

****

The DPW has reviewed the subject petition for the street opening location and has the following recommendations:

20-025 – Install and maintain approximately 570 feet of 2 inch 60 psig plastic gas main in Wynot Road from the existing 2 inch plastic to the end of main at house #49 to replace an older main and service the users along the route. Wynot Road is under the former moratorium having been shimmed and microsurfaced in 2015. For longitudinal trenches in a road resurfaced as this road was the moratorium is 5 years. Road openings may be made after 2020 without waiving the ordinance. Since the street is under the moratorium, I recommend that the petition not be granted. However, if the Council finds extenuating circumstances and there is no viable option to safely maintain gas utility service, I would recommend that the petition for this road opening only be granted under the normal conditions, with emphasis on:

- That the new main not occupy any part of the trench now occupied by the existing water or sewer mains;
- that the main to be abandoned be removed;
- that after maintaining the 4" minimum pavement depth temporary trenches from both the installation and the removal through one winter, but within one year of placement of the temporary trench repair, the permanent repair be a grind and inlay with a minimum 1 foot overlap of the adjacent pavement 1 ½ inches deep of both trenches and of each service trench within the limits of the gas work;
- That any curbs or sidewalks or other features disturbed shall be repaired to the satisfaction of the DPW;
- "Neither National Grid nor any contractor is authorized to close any street or to close a direction of travel to facilitate their work without authorization from the Director of the Department of Public Works or the Highway Superintendent. The Chief of Police can also authorize a closure for a police or fire emergency. Construction zone traffic safety issues are to be addressed by using appropriate traffic control signs and devices and the use of trained traffic control personnel to safely guide traffic through the work zone. If a closure is authorized by the DPW, it shall not be implemented until signs and traffic control officers (where needed) are properly in place in conformity with the written plan prepared by the contractor's engineer and approved by the DPW and the Police Department."

Bob Campbell, Town Engineer

85 Quincy Avenue, Braintree, MA 02184 Telephone: 781-794-8010 Fax: 781-356-6803

150 Potter Road
Braintree, MA 02184
www.beld.com
781.348.BELD
781.348.1003 fax

Date: 2/13/20

Ms. Susan Cimino
One JFK Memorial Drive
Braintree, Ma 02184

Dear Ms. Cimino,

National Grid: Petition # 20-025

The proposed plan and scope of work does not impact existing BELD electric or communication utilities within this site.

The Engineering Department has no objection for approval being granted to this permit.

Sincerely,

Darron MacDonald
Field Engineer
Office: 781.348-1072
Cell: 339-235-6450

PETITION OF NATIONAL GRID FOR GAS MAIN LOCATIONS

#20-025

Town of Braintree / Town Council:

The Nationalgrid hereby respectfully requests your consent to the locations of mains as hereinafter described for the transmission and distribution of gas in and under the following public streets, lanes, highways and places of the **Town of Braintree** and of the pipes, valves, governors, manholes and other structures, fixtures and appurtenances designed or intended to protect or operate said mains and accomplish the objects of said Company; and the digging up and opening the ground to lay or place same:

To install and maintain approximately 570 feet more or less of 2 inch 60 psig plastic gas main in Wynot Rd., Braintree. From the existing 2 inch 60 psig plastic gas main (2001) at Washington St. westerly to the end of main at #49 Wynot Rd. To replace the existing 2 inch 60 psig coated steel gas main (1929) in Wynot Rd.

January 29, 2020

By: Barbara H. Kelleher
Barbara H. Kelleher
Permit Representative

Town of Braintree / Town Council:

IT IS HEREBY ORDERED that the locations of the mains of the Nationalgrid for the transmission and distribution of gas in and under the public streets, lanes, highways and places of the **Town of Braintree** substantially as described in the petition date **January 29, 2020** attached hereto and hereby made a part hereof, and of the pipes, valves, governors, manholes and other structures, fixtures and appurtenances designed or intended to protect or operate said mains and/or accomplish the objects of said Company, and the digging up and opening the ground to lay or place same, are hereby consented to and approved.

The said Nationalgrid shall comply with all applicable provisions of law and ordinances of the **Town of Braintree** applicable to the enjoyment of said locations and rights.

Date this _____ day of _____, 20____.
I hereby certify that the foregoing order was duly adopted by the _____ of the Town of _____, MA on the _____ day of _____, 20____.

By: _____

_____
Title

WO# 1022870

Return Original to Permit Section
National Grid
40 Sylvan Rd, Waltham, MA 02451
Retain Duplicate for your Records

RECEIVED TOWN CLERK
BRAINTREE, MA
2020 FEB 12 AM 9:29

#20-025

Office of the Board of Assessors

One JFK Memorial Drive
Braintree, Massachusetts 02184
Telephone: (781) 794-8050 • Fax: (781) 794-8068

Charles C. Kokoros
Mayor

Robert Brinkmann
Deputy Assessor

Board of Assessors
Robert Cusack
Chair
Susan O'Brien
Vice Chair
Robert Connolly

DATE:	February 3, 2020
APPLICANT:	National Grid
ADDRESS:	Various
MAP & LOT:	Various

This is to certify that at the time of submission of this form to the Board of Assessors, the names and addresses of the parties assessed as adjoining owners to the parcel of land shown and described are as written and are the parties according to the records of the Assessors.

Office of the Board of Assessors ES

Robert M Cusack
Chairman

RECEIVED TOWN CLERK
BRAINTREE, MA
2020 FEB 12 AM 9:29

Braintree
Abutters List

Subject Parcel ID:

Subject Property Location:

ParcelID	Location	Owner	Co-Owner	Mailing Address	City	State	Zip
2022 0 10	19 WYNOT RD	PRENDERGAST WINIFRED I		19 WYNOT ROAD	BRAINTREE	MA	02184
2022 0 11	11 WYNOT RD	TRUDEL MARGUERITE		11 WYNOT ROAD	BRAINTREE	MA	02184
2022 0 14	572 WASHINGTON ST	CULLEN JOSEPH J	CULLEN KRISTINA M TBYE	572 WASHINGTON ST	BRAINTREE	MA	02184
2022 0 2	550 WASHINGTON ST	MESSINA FRANCIS X		400 FRANKLIN ST PO BOX N	BRAINTREE	MA	02184
2022 0 2A	546 WASHINGTON ST	BRAINTREE TOWN OF	SCHOOL DEPT	TOWN HALL	BRAINTREE	MA	02184
2022 0 3	552 WASHINGTON ST	MESSINA RESIDENTIAL PROPERT		PO BOX 859059	BRAINTREE	MA	02185
2022 0 4	49 WYNOT RD	MEGLEY MICHAEL F		49 WYNOT RD	BRAINTREE	MA	02184
2022 0 5	45 WYNOT RD	ZHANG CHUN XIA	LIANG JING YONG TBYE	45 WYNOT RD	BRAINTREE	MA	02184
2022 0 6	39 WYNOT RD	THOMPSON JAMES	THOMPSON LAURIE TBYE	39 WYNOT RD	BRAINTREE	MA	02184
2022 0 7	33 WYNOT RD	STARR KENNETH	STARR JUDITH A	33 WYNOT RD	BRAINTREE	MA	02184
2022 0 8	29 WYNOT RD	BONSEY JOHN W	BONSEY JANET M	29 WYNOT RD	BRAINTREE	MA	02184
2022 0 9	25 WYNOT RD	CARNELL JOHN E	CARNELL DEBRA TBYE	25 WYNOT RD	BRAINTREE	MA	02184
2022 13 1L	1 WYNOT RD 1L	LAU HANNA S		116 ELEANOR DRIVE	BRAINTREE	MA	02184
2022 13 1R	1 WYNOT RD 1R	MURRAY VALERIE R		1 WYNOT ROAD UNIT 1R	BRAINTREE	MA	02184
2022 13 2L	1 WYNOT RD 2L	DONOVAN LINDA M		1 WYNOT RD UNIT 2L	BRAINTREE	MA	02184
2022 13 2R	1 WYNOT RD 2R	CAHILL MATTHEW A		1 WYNOT RD UNIT 2R	BRAINTREE	MA	02184
2029 0 1	545 WASHINGTON ST	545 WASHINGTON STREET LLC		545 WASHINGTON ST	BRAINTREE	MA	02184
2030 0 27	549 WASHINGTON ST	J VICTOR YOUNG TRS	CATAMOUNT REALTY TRU	11 STONEGATE LANE	HINGHAM	MA	02043
2030 0 28	555 WASHINGTON ST	PLANTE MARIA A	PLANTE PATRICK A	18 GRACE DRIVE	COHASSET	MA	02025
2030 0 29	569 WASHINGTON ST	LAURIA DANIEL A/ROSEMARIE M T	LAURIA FINANCIAL TRUST	569 WASHINGTON ST	BRAINTREE	MA	02184

Parcel Count: **20**

End of Report

#20-025

RECEIVED TOWN CLERK
BRAINTREE, MA
2020 FEB 12 AM 9:29

- **PRESSURE GAUGES ARE REQUIRED AT ALL MAINS FOR ALL TIE-INS. REFER TO GCON-02001 PROCEDURE.**
- **CHECK ELECTRONIC MAPPING SYSTEM FOR MOST CURRENT MAPPING INFORMATION.**

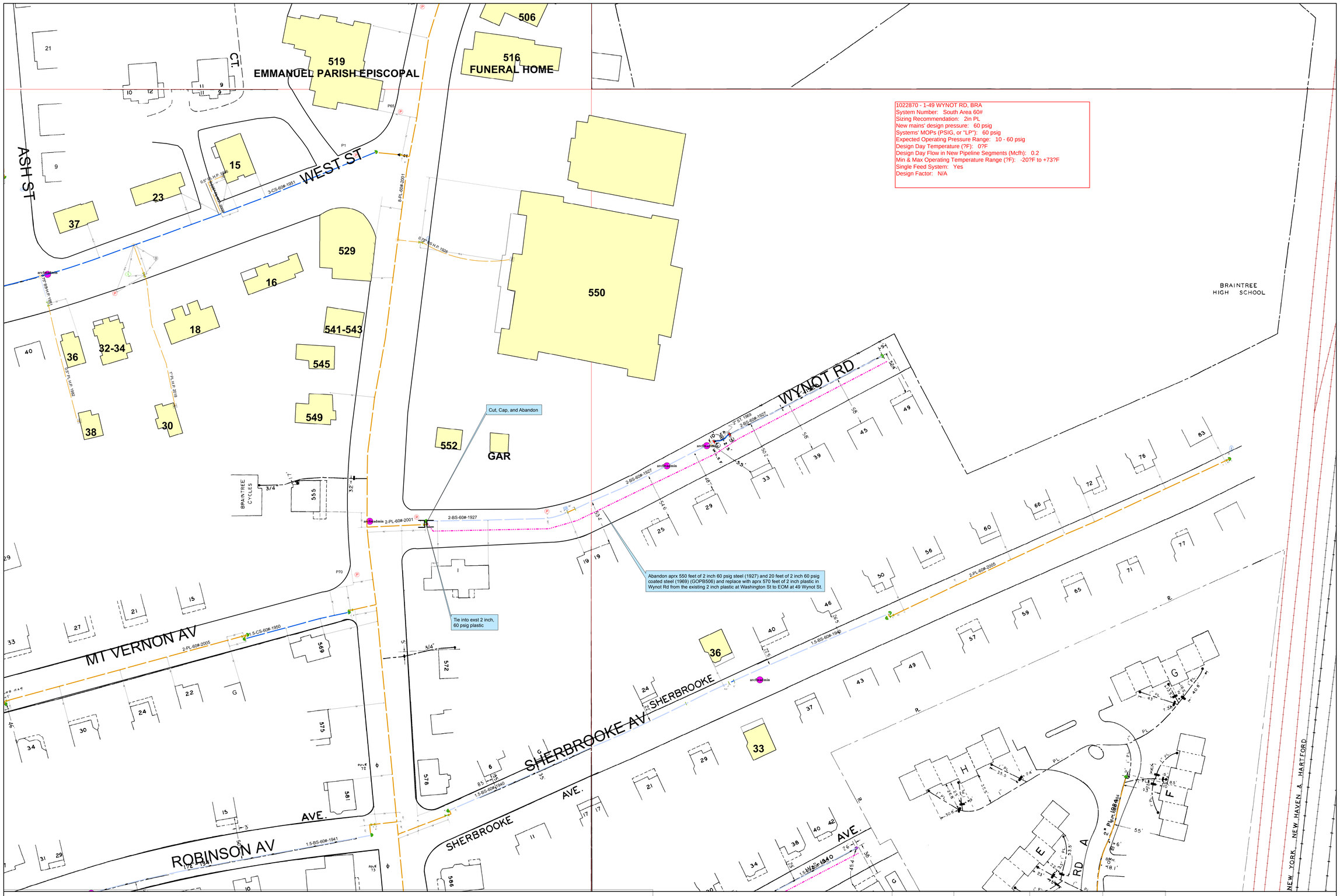

ENGINEERING DESIGN - Proposed Scope of Work

1-49 WYNOT RD, BRA

As part of the BSMNRPL program, Main and Service Replacement recommends the relay of:
--> aprx 550 feet of 2 inch 60 psig steel (1927) and 20 feet of 2 inch 60 psig coated steel (1969) (GOPB506) with aprx 570 feet of 2 inch plastic in Wynot Rd from the existing 2 inch plastic at Washington St to EOM at 49 Wynot St.

N

60 30 0 60 Feet

NOTE: The location of surface and underground objects shown are not warranted to be correct.

ENGINEER	GRLOGUE	SIZE	2 inch
DATE	**8/7/2019**	MATERIAL	PL
LENGTH	570 Feet	PRESSURE	60 psig
SECTIONALS	BRAT1520	WORK ORDER #	1022870
	BRAT1521		

ArcFM

nationalgrid

Charles C. Kokoros, Mayor

BRAINTREE DEPARTMENT OF PUBLIC WORKS

Engineering Division
Robert P. Campbell, PE, PTOE, Town Engineer
rcampbell@braintreema.gov
John J. Morse, Assistant Town Engineer
jmorse@braintreema.gov

Memo

Date: March 11, 2020
To: Susan M. Cimino, Clerk of the Council
From: Bob Campbell
CC: Jim Arsenault, Ben Hulke
RE: Street Opening Petition, 20-026 Elm St and Charles St

****

The DPW has reviewed the subject petition for the street opening location and has the following recommendations:

20-026 – Install and maintain approximately 1465 feet of 8 inch 60 psig plastic gas main in Elm Street from the existing 1 inch plastic service at Service Road to the existing 6 inch 60 psig main at Middle Street and including an 8 inch 60 psig connection at Church Street and 2 inch 60 psig connections at Vinton Ave, Elm Ter, Lowell St and Cedar St, and also to install and maintain 490 feet of 2 inch 60 psig plastic gas main in Charles Street, all to replace older mains and service the users along the route. Neither Elm Street nor Charles Street is under the moratorium, Elm Street having been reconstructed in 2000 and Charles Street having been reconstructed in 2013, but both are in good condition. Since neither street is under the moratorium, I recommend that the petition be granted under the normal conditions with emphasis on the following conditions:

- The plan incorrectly shows the existing roadway conditions at the Elm Street / Church Street / Elm Terrace intersection, ignoring the wall running through the intersection separating the collector and local traffic. The plan must be modified to show only one (perpendicular) crossing of the wall and detailing how it is to be accomplished to the satisfaction of the DPW;
- That the new mains not occupy any part of the trenches now occupied by the existing water or sewer mains;
- that the mains to be abandoned be removed;
- that after maintaining the 4" minimum* pavement depth temporary trenches from both the installations and the removals through one winter, but within one year of placement of the temporary trench repair, that the permanent repair be a grind and inlay with a minimum 1 foot overlap of the adjacent pavement 1 ½ inches deep of both trenches and of each service trench within the limits of the gas work;
- That any curbs or sidewalks or other features disturbed shall be repaired to the satisfaction of the DPW;
- "Neither National Grid nor any contractor is authorized to close any street or to close a direction of travel to facilitate their work without authorization from the Director of the Department of Public Works

or the Highway Superintendent. The Chief of Police can also authorize a closure for a police or fire emergency. Construction zone traffic safety issues are to be addressed by using appropriate traffic control signs and devices and the use of trained traffic control personnel to safely guide traffic through the work zone. If a closure is authorized by the DPW, it shall not be implemented until signs and traffic control officers (where needed) are properly in place in conformity with the written plan prepared by the contractor's engineer and approved by the DPW and the Police Department."

* 4" depth is to be constructed at all locations where the existing pavement depth is 4" or less. At all other locations the thickness of the pavement depth placed shall match the existing pavement thickness. Pavement shall be placed and compacted in courses not to exceed 2 ½ inches.

Bob Campbell, Town Engineer

PETITION OF NATIONAL GRID FOR GAS MAIN LOCATIONS

#20-026

Town of Braintree / Town Council:

The Nationalgrid hereby respectfully requests your consent to the locations of mains as hereinafter described for the transmission and distribution of gas in and under the following public streets, lanes, highways and places of the **Town of Braintree** and of the pipes, valves, governors, manholes and other structures, fixtures and appurtenances designed or intended to protect or operate said mains and accomplish the objects of said Company; and the digging up and opening the ground to lay or place same:

To install and maintain approximately 1465 feet more or less of 8 inch 60 psig plastic gas main in Elm St., (and Service Rd.) Braintree. From the intersection of Elm St. and Middle St. southwesterly to the end of main at #131-137 Elm St., approximately 490 feet more or less of 2 inch 60 psig plastic gas main on Charles St. from the new 2 inch 60 psig plastc gas main in Elm St. northwesterly to the end of main in #35 Charles St. and approximately 105 feet more or less of 8 inch 60 psig plastic gas main in Church St. from the new 8 inch 60 psig plastic gas main in Service Rd. northwesterly to the existing 8 inch 60 psig plastic gas main Church St. To replace the existing 6 inch 60 psig bare steel (1911) in Elm St. and Service Rd., the existing 2 inch bare steel 60psig gas main (1938) and 2 inch coated steel 60 psig gas main (1957) in Charles St. and the 8 inch 60 psig coated steel gas main (1956) in Church St.

January 29, 2020

By: Barbara H. Kelleher
Barbara H. Kelleher
Permit Representative

Town of Braintree / Town Council:

IT IS HEREBY ORDERED that the locations of the mains of the Nationalgrid for the transmission and distribution of gas in and under the public streets, lanes, highways and places of the **Town of Braintree** substantially as described in the petition date **January 29, 2020** attached hereto and hereby made a part hereof, and of the pipes, valves, governors, manholes and other structures, fixtures and appurtenances designed or intended to protect or operate said mains and/or accomplish the objects of said Company, and the digging up and opening the ground to lay or place same, are hereby consented to and approved.

The said Nationalgrid shall comply with all applicable provisions of law and ordinances of the **Town of Braintree** applicable to the enjoyment of said locations and rights.

Date this _____ day of _____, 20____.
I hereby certify that the foregoing order was duly adopted by the _____ of the Town of _____, MA on the _____ day of _____, 20____.

By: _____

_____
Title

RECEIVED TOWN CLERK
BRAINTREE, MA
2020 FEB 12 AM 9:31

WO# 1248756

Return Original to Permit Section
National Grid
40 Sylvan Rd, Waltham, MA 02451
Retain Duplicate for your Records

#20-026

Office of the Board of Assessors

One JFK Memorial Drive
Braintree, Massachusetts 02184
Telephone: (781) 794-8050 • Fax: (781) 794-8068

Charles C. Kokoros
Mayor

Robert Brinkmann
Deputy Assessor

Board of Assessors
Robert Cusack
Chair
Susan O'Brien
Vice Chair
Robert Connolly

DATE:	February 4, 2020
APPLICANT:	National Grid
ADDRESS:	Various
MAP & LOT:	Various

This is to certify that at the time of submission of this form to the Board of Assessors, the names and addresses of the parties assessed as adjoining owners to the parcel of land shown and described are as written and are the parties according to the records of the Assessors.

Office of the Board of Assessors E.S

Robert M Cusack
Chairman

RECEIVED TOWN CLERK
BRAINTREE, MA
2020 FEB 12 AM 9:31

Braintree
Abutters List

Subject Parcel ID:

Subject Property Location:

ParcelID	Location	Owner	Co-Owner	Mailing Address	City	State	Zip
2002 0 11	23 ELM TR	JOHNSON DEBORAH A		23 ELM TR	BRAINTREE	MA	02184
2002 0 12	21 ELM TR	POWERS EDWARD J	POWERS MARGARET A	21 ELM TERRACE	BRAINTREE	MA	02184
2002 0 13	10 ELM TR	PHAM NGOC THI B		10 ELM TERRACE	BRAINTREE	MA	02184
2002 0 14	179 ELM ST	SALEH YASER F	ALI ELHAM F	50 GRAY TERR	BRAINTREE	MA	02184
2002 0 15	173 ELM ST	MA KENIX A		173 ELM STREET	BRAINTREE	MA	02184
2002 0 16	163 ELM ST	CHAN KEN Y	CHAN DEBBIE M TBYE	163 ELM STREET	BRAINTREE	MA	02184
2002 0 17	8 10 VINTON AV	DEBRECZENI JENNIFER		8 VINTON AVE	BRAINTREE	MA	02184
2002 0 2	265 ELM ST	TASSINARI ROBERT R TT	ROBERT R TASSINARI TRU	415 V F W DRIVE	ROCKLAND	MA	02370
2002 0 21	21 VINTON AV	VENUTI ANTHONY J JR		21 VINTON AV	BRAINTREE	MA	02184
2002 0 22	17 VINTON AV	CENTEIO FILIPE		17 VINTON AVE	BRAINTREE	MA	02184
2002 0 23	15 VINTON AV	CHUNG KHANH T	STEWART ALAN W	15 VINTON AVE	BRAINTREE	MA	02184
2002 0 24	11 VINTON AV	BATES PAUL R/ NANCY J TRS	FUTURE TRUST	51 ALBERTINA STREET	QUINCY	MA	02169
2002 0 25	131 145 ELM ST	DEPAULO RALPH G	DEPAULO DONNA A TBYE	47 PLEASANT STREET	BRAINTREE	MA	02184
2002 0 3	245 ELM ST	YU XIAO Z/CHAN SHUI M TR	XYZ REALTY TRUST	179 DAVIS ST	QUINCY	MA	02170
2002 0 7	195 ELM ST	MAZZINI DANIELLE C	MAZZINI CHRISTOPHER L T	195 ELM STREET	BRAINTREE	MA	02184
2002 0 8	8 ELM TR	STEELE PAUL R	STEELE DONNA J TBYE	63 SUNNYPLAIN AVE	WEYMOUTH	MA	02188
2002 0 9	20 ELM TR	GRANT BONNIE E	GRANT ROBERT M	20 ELM TERRACE	BRAINTREE	MA	02184
2002 3A 101	255 ELM ST 101	255 ELM STREET, LLC		PO BOX 64	SUDBURY	MA	01776
2002 3A 102	255 ELM ST 102	255 ELM STREET, LLC		PO BOX 64	SUDBURY	MA	01776
2002 3A 103	255 ELM ST 103	255 ELM STREET, LLC		PO BOX 64	SUDBURY	MA	01776
2002 3A 104	255 ELM ST 104	255 ELM STREET LLC		PO BOX 64	SUDBURY	MA	01776
2002 3A 201	255 ELM ST 201	BURLEIGH EVAN G		255 ELM ST # 201	BRAINTREE	MA	02184
2002 3A 202	255 ELM ST 202	ALESSANDRO GREGORY J TRS	CJ REALTY TRUST	65 CEDAR STREET	BRAINTREE	MA	02184
2002 3A 203	255 ELM ST 203	255 ELM STREET LLC		PO BOX 64	SUDBURY	MA	01776
2002 3A 204	255 ELM ST 204	255 ELM STREET LLC		PO BOX 64	SUDBURY	MA	01776
2002 3A 301	255 ELM ST 301	O'DONNELL BRENDA T		255 ELM ST UNIT 301	BRAINTREE	MA	02184
2002 3A 302	255 ELM ST 302	255 ELM STREET LLC		PO BOX 64	SUDBURY	MA	01776
2002 3A 303	255 ELM ST 303	255 ELM STREET LLC		PO BOX 64	SUDBURY	MA	01776
2002 3A 304	255 ELM ST 304	255 ELM STREET LLC		PO BOX 64	SUDBURY	MA	01776
2002 5 1	205 ELM ST 1	JENNEY LISA A		205 ELM ST #1	BRAINTREE	MA	02184
2002 5 10	205 ELM ST 10	DAVIDSON MARK	NISHIZAWA NORI TBYE	205 ELM ST #10	BRAINTREE	MA	02184
2002 5 11	205 ELM ST 11	GARCIA JUAN CARLOS	DE MULDER ANNA TBYE	205 ELM ST #11	BRAINTREE	MA	02184
2002 5 12	205 ELM ST 12	WENG XUJIE	LU YAN TBYE	205 ELM ST #12	BRAINTREE	MA	02184
2002 5 2	205 ELM ST 2	LIU YIXIAO	SHI JIESHENG TBYE	205 ELM ST #2	BRAINTREE	MA	02184
2002 5 3	205 ELM ST 3	THURSTON CHRISTOPHER		205 ELM STREET #3	BRAINTREE	MA	02184
2002 5 4	205 ELM ST 4	YUAN AVERY I		205 ELM ST #4	Braintree	MA	02184
2002 5 5	205 ELM ST 5	CRISTOFERI THOMAS S	CRISTOFERI NANCY M TBY	205 ELM ST #5	BRAINTREE	MA	02184
2002 5 6	205 ELM ST 6	ALLEN THOMAS/ANNE TR	THE ALLEN REALTY TRUST	205 ELM ST #6	BRAINTREE	MA	02184
2002 5 7	205 ELM ST 7	CAFFREY STEPHANIE M		205 ELM ST #7	BRAINTREE	MA	02184
2002 5 8	205 ELM ST 8	NOONAN KRISTEN		205 ELM ST #8	BRAINTREE	MA	02184

RECEIVED TOWN CLERK
BRAINTREE, MA
2020 FEB 5 AM 9:32

#20-026

Braintree
Abutters List

Subject Parcel ID:

Subject Property Location:

ParcelID	Location	Owner	Co-Owner	Mailing Address	City	State	Zip
2002 5 9	205 ELM ST 9	YU YI	RONGRONG ZHENG TBYE	205 ELM ST #9	BRAINTREE	MA	02184
2006 0 17	275 ELM ST	275 ELM STREET LLC		237 OLD SCHOOL HOUSE L	HANOVER	MA	02339
2006 0 8	293 ELM ST	MCHUGH ROSEANNE	WILLIAMS MICHAEL TRS	39 ADAMS STREET	BRAINTREE	MA	02184
2025 0 17	98 PARK ST	SUAREZ PATRICE M	SUAREZ GEORGE M TBYE	98 PARK STREET	BRAINTREE	MA	02184
2025 0 19	82 PARK ST	CURTIN LAURENCE J JR	CURTIN KAREN I	82 PARK ST	BRAINTREE	MA	02184
2025 0 1C	242 ELM ST	BERGER ROBERT J	BERGER SARA W TBYE	242 ELM ST	BRAINTREE	MA	02184
2025 0 1D	250 ELM ST	PHAN TRAN	HO SUKYAN TBYE	250 ELM STREET	BRAINTREE	MA	02184
2025 0 1E	256 ELM ST	DIBONA RONALD	DIBONA KANG C	256 ELM ST	BRAINTREE	MA	02184
2025 0 1F	6 CEDAR ST	CURRIER BRIAN	CURRIER DAWNE T TBYE	6 CEDAR ST	BRAINTREE	MA	02184
2025 0 1G	14 CEDAR ST	BAKER-BONCALDO ALYSE N	BONCALDO PHILIP B TBYE	14 CEDAR ST	BRAINTREE	MA	02184
2025 0 20	78 PARK ST	O`BRIEN EDWARD J	O`BRIEN MAUREEN	78 PARK ST	BRAINTREE	MA	02184
2025 0 21	76 PARK ST	LACEY PATRICK	LACEY DINA TBYE	76 PARK ST	BRAINTREE	MA	02184
2025 0 22	72 PARK ST	BESSANT JANICE M		72 PARK ST	BRAINTREE	MA	02184
2025 0 25	24 LOWELL ST	FORZESE BART	FORZESE SUSAN TBYE	24 LOWELL ST	BRAINTREE	MA	02185
2025 0 26	216 ELM ST	CULKIN BARRY F/DEBORAH A TR	CULKIN FAMILY TRUST	216 ELM STREET	BRAINTREE	MA	02184
2025 0 28	29 CHARLES ST	KENN PAMELA		29 CHARLES ST	BRAINTREE	MA	02184
2025 0 29	35 CHARLES ST	HUBBARD MARY A LE	HUBBARD GERARD S	35 CHARLES ST	BRAINTREE	MA	02184
2025 0 3	234 ELM ST	MCCARTHY BRENDAN J	MCCARTHY KATHERINE L T	234 ELM STREET	BRAINTREE	MA	02184
2025 0 30	36 CHARLES ST	MANNING BARBARA A	MANNING SUSAN M JTS	36 CHARLES ST	BRAINTREE	MA	02184
2025 0 31	32 CHARLES ST	DALEY KEVIN F	DALEY DANIEL J /RITA P L	32 CHARLES ST	BRAINTREE	MA	02184
2025 0 32	28 CHARLES ST	BOYLE JOHN M	BOYLE KATHERINE P	28 CHARLES ST	BRAINTREE	MA	02184
2025 0 3501F	20 #1 CHURCH ST	DREAMVENUE LLC		60 WHITEHALL WAY	BELLINGHAM	MA	02019
2025 0 3502F	20 #2 CHURCH ST	COELHO MICHELLE		20 CHURCH ST UNIT 20-2	BRAINTREE	MA	02184
2025 0 3503F	20 #3 CHURCH ST	MATTIE PATSY M		PO BOX 30	WEYMOUTH	MA	02188
2025 0 3504F	20 #4 CHURCH ST	ZHEN XUE HUANG		20 CHURCH ST U20-4	BRAINTREE	MA	02184
2025 0 3505F	20 #5 CHURCH ST	JOHNSON NICOLE A	PAPPAS STEVEN JTS	20 CHURCH ST UNIT 20-5	BRAINTREE	MA	02184
2025 0 3506F	20 #6 CHURCH ST	DOUCETTE DIANE		20 CHURCH STREET UNIT 2	BRAINTREE	MA	02184
2025 0 3507F	20 #7 CHURCH ST	FRANCIS DAVID L	FRANCIS BARBARA	41 LAKEWOOD DRIVE	PLYMOUTH	MA	02360
2025 0 3508F	20 #8 CHURCH ST	NG YAN L		215 CENTRE ST UNIT 6	QUINCY	MA	02169
2025 0 3509F	20 #9 CHURCH ST	BICKFORD KATHLEEN A		20 CHURCH ST UNIT 20-9	BRAINTREE	MA	02184
2025 0 3510F	20 #10 CHURCH ST	LIN CHEN YU		20 CHURCH ST UNIT 20-10	BRAINTREE	MA	02184
2025 0 3511F	20 #11 CHURCH ST	NGUYEN TIEN HUU		20 CHURCH ST UNIT 20-11	BRAINTREE	MA	00000
2025 0 3512F	20 #12 CHURCH ST	LOUIE ANNIE MIU		20 CHURCH ST U20-12	BRAINTREE	MA	02184
2025 0 3513F	150 U-1 ELM ST	CLANCY FAMILY LIMITED PARTN		457 MAIN STREET	WEYMOUTH	MA	02190
2025 0 3514F	150 U-2 ELM ST	SUM TIFFANY		150 ELM ST UNIT 2	BRAINTREE	MA	02184
2025 0 3515F	150 U-3 ELM ST	CHEN YUN		150 ELM ST UNIT 3	BRAINTREE	MA	02184
2025 0 3516F	150 U-4 ELM ST	LI HENRY	WONG WENDY TBYE	65 WILKINS RD	BRAINTREE	MA	02184
2025 0 3517F	150 U-5 ELM ST	LEE KEN W	XU LIHONG TBYE	150 ELM ST UNIT 5	BRIANTREE	MA	02184
2025 0 3518F	150 U-6 ELM ST	FRASER EILEEN P		150 ELM STREET #6	BRAINTREE	MA	02184
2025 0 3519F	150 U-7 ELM ST	WU YU	CAI AIXIN	150 ELM STREET UNIT 7	BRAINTREE	MA	02184

RECEIVED TOWN CLERK
BRAINTREE, MA
FEB 12 AM 9:

#20-028

Braintree
Abutters List

Subject Parcel ID:

Subject Property Location:

ParcelID	Location	Owner	Co-Owner	Mailing Address	City	State	Zip
2025 0 3521F	150 U-9 ELM ST	BUTLER DIARRA M		150 ELM ST UNIT 9	BRAINTREE	MA	02184
2025 0 3522F	150 U-10 ELM ST	NG KWONG TAI	LAW KIT YEE TBYE	28 ALFRED RD	BRAINTREE	MA	02184
2025 0 3523F	150 U-11 ELM ST	AHMED SAEED	AHMED NUSRAT	50 BLOSSOM ROAD	BRAINTREE	MA	02184
2025 0 3524F	150 U-12 ELM ST	XIAO JUN MAI	WU JUN J JTS	150 ELM ST UNIT 12	BRAINTREE	MA	02184
2025 0 3525F	160 U-1 ELM ST	BARRY DORIS P LE BARRY LYNE	C/O JONATHAN YOUNG	817 WASHINGTON STREET	BRAINTREE	MA	02184
2025 0 3526F	160 U-2 ELM ST	MURALIDHARAN RAJAGOPALAN F		160 ELM ST UNIT 2	BRAINTREE	MA	02184
2025 0 3527F	160 U-3 ELM ST	LUZURIAGA CARLOS JR	RODRIGUEZ SUEHEILY TB	160 ELM ST UNIT 3	BRAINTREE	MA	02184
2025 0 3528F	160 U-4 ELM ST	SMALL PATRICK T		160 ELM ST #4	Braintree	MA	02184
2025 0 3529F	160 U-5 ELM ST	DAHL JEANNE M	FAHERTY TIMOTHY M TICS	160 ELM ST UNIT 5	BRAINTREE	MA	02184
2025 0 3530F	160 U-6 ELM ST	KWONG CHO KIT		160 ELM STREET UNIT 6	BRAINTREE	MA	02184
2025 0 3531F	160 U-7 ELM ST	LAMKIN VICTORIA		160 ELM ST UNIT 7	BRAINTREE	MA	02184
2025 0 3532F	160 U-8 ELM ST	THE TULLIS FAMILY LTD PTRNSH	c/o ROBERT D TULLIS	616 MIDDLE STREET	BRAINTREE	MA	02184
2025 0 3533F	160 U-9 ELM ST	ZHOU SHOUXIAN		160 ELM ST UNIT 9	BRAINTREE	MA	02184
2025 0 3534F	160 U-10 ELM ST	WALSH MICHAEL T		160 ELM ST # 10	BRAINTREE	MA	02184
2025 0 3535F	160 U-11 ELM ST	SUN YUAN	YU JIEYING TBYE	160 ELM ST UNIT 11	BRAINTREE	MA	02184
2025 0 3536F	160 U-12 ELM ST	WU MAN WAI		160 ELM ST UNIT 12	BRAINTREE	MA	02184
2025 0 3901A	30 #1 CHURCH ST	ORWIG HEIDI A		30 U-30-1 CHURCH ST	BRAINTREE	MA	02184
2025 0 3902A	30 #2 CHURCH ST	WALSH DOROTHY M		27 LAKE STREET	ABINGTON	MA	02351
2025 0 3903A	30 #3 CHURCH ST	GERAN EDWARD W JR		30 CHURCH ST U 30-3	BRAINTREE	MA	02184
2025 0 3904A	30 #4 CHURCH ST	McKEON PATRICIA E TR	PATRICIA E McKEON TRUS	30 CHURCH ST UNIT 4	BRAINTREE	MA	02184
2025 0 3905A	30 #5 CHURCH ST	CHAN KELLIE K		30 CHURCH ST UNIT 5	BRAINTREE	MA	02184
2025 0 3906A	30 #6 CHURCH ST	CHU TAT W		4 EMERSON RD	LINCOLN	MA	01773
2025 0 3907A	30 #7 CHURCH ST	GILBOY MARGARET A		30 CHURCH ST UNIT 7	BRAINTREE	MA	02184
2025 0 3908A	30 #8 CHURCH ST	SELKO ARION		30 CHURCH ST UNIT 8	BRAINTREE	MA	02184
2025 0 3909A	30 #9 CHURCH ST	KEMPE DOUGLAS J		30 CHURCH STREET UNIT #	BRAINTREE	MA	02184
2025 0 3910A	30 #10 CHURCH ST	WONG CINDY		30 CHURCH ST #10	BRAINTREE	MA	02184
2025 0 3911A	30 #11 CHURCH ST	LINTON TIMOTHY R		30 CHURCH STREET #11	BRAINTREE	MA	02184
2025 0 3912A	30 #12 CHURCH ST	DE TISSERA DAMNATH	DE TISSERA DILUSHA TBY	3 UNION ST #1	CAMBRIDGE	MA	02139
2025 0 4	15 LOWELL ST	NEWCOMB JOAN S TR	THE FIFTEEN LOWELL ST R	15 LOWELL ST	BRAINTREE	MA	02184
2025 0 49	196 ELM ST	ALL SOULS CHURCH OF BRAINTR	ATTN BOARD OF TRUSTEE	P O BOX 850219	BRAINTREE	MA	02185-0219
2025 0 49B	29 CHURCH ST	HARTE FRANCIS X LE	HARTE CHRISTOPHER J/K	29 CHURCH STREET	BRAINTREE	MA	02184
2065 0 28	15 CEDAR ST	SAMPSON STEPHEN F SR	SAMPSON ELIZABETH J T	15 CEDAR ST	BRAINTREE	MA	02184
2065 0 3	17 THORNDIKE ST	LOWELL STEPHEN J	LOWELL MARY E	17 THORNDIKE ST	BRAINTREE	MA	02184
2065 0 31	280 ELM ST	HENDERSON WAYNE B	HENDERSON KAREN K TB	280 ELM ST	BRAINTREE	MA	02184

Parcel Count: **114**

2020 FEB 12 AM 9:32
RECEIVED TOWN CLERK
BRAINTREE, MA

End of Report

#20-029

150 Potter Road
Braintree, MA 02184
www.beld.com
781.348.BELD
781.348.1003 fax

Date: 2/20/20

Ms. Susan Cimino
One JFK Memorial Drive
Braintree, Ma 02184

Dear Ms. Cimino,

National Grid: Petition # 20-026

Please note, BELD has a 115,000 volt oil filled transmission line located at the corner of Elm/Middle ST... BELD Engineering should be notified in advance of any excavation to be performed in close proximity to this line. BELD will provide onsite support and safety personnel at no cost to the project.

BELD also has a 13,800 volt underground system on Elm and Middle St. This is a concrete encased duct bank to be identified through the Dig safe process.

Please see attached drawing of the locations of services, let me know if you need any additional information.

Sincerely,

Darron MacDonald
Field Engineer
Office: 781.348-1072
Cell: 339-235-6450

20 026
BELD
Elm Street

- **PRESSURE GAUGES ARE REQUIRED AT ALL MAINS FOR ALL TIE-INS. REFER TO GCON-02001 PROCEDURE.**
- **CHECK ELECTRONIC MAPPING SYSTEM FOR MOST CURRENT MAPPING INFORMATION.**

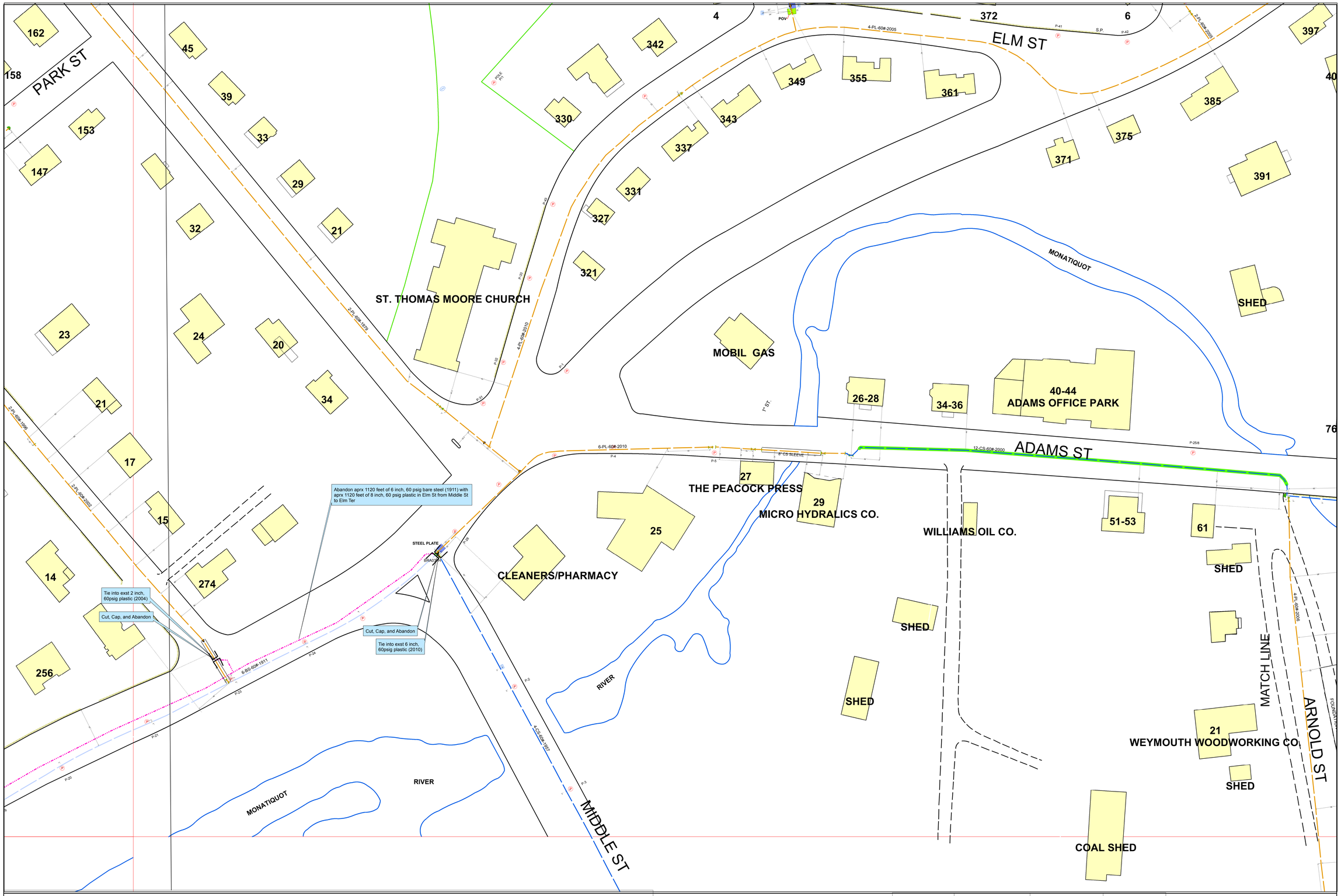

ENGINEERING DESIGN - Proposed Scope of Work

131-265 ELM ST, BRA, CHARLES ST & CHURCH ST

As part of the BSMNRPL Program, Main and Service Replacement recommends the relay of:
--> aprx 1120 feet of 6 inch, 60 psig bare steel (1911) with aprx 1120 feet of 8 inch, 60 psig plastic in Elm St from Middle St to Elm Ter
--> aprx 205 feet of 1.5 inch, 60 psig bare steel (1938) and 285 feet of 2 inch, 60 psig coated steel (1957 - DBRA0036) with aprx 490 feet of 2 inch, 60 psig plastic in Charles St
--> aprx 345 feet of 6 inch, 60 psig bare steel (1911) with 2 inch plastic in Old Elm St from end of main to existing 6 inch bare steel in Elm St
--> aprx 105 feet of 8 inch, 60psig coated steel (1956 - DBRA0039) with aprx 105 feet of 8 inch, 60 psig plastic in Church St from Old Elm St to existing 8 inch plastic

N

60 30 0 60 Feet

NOTE: The location of surface and underground objects shown are not warranted to be correct.

ENGINEER	GRLOGUE	SIZE	2/8 inch
DATE	**8/12/2019**	MATERIAL	PL
LENGTH	2060 Feet	PRESSURE	60 psig
SECTIONALS	BRAS1581	WORK ORDER #	1248756
	BRAS1582		

ArcFM

nationalgrid

- **PRESSURE GAUGES ARE REQUIRED AT ALL MAINS FOR ALL TIE-INS. REFER TO GCON-02001 PROCEDURE.**
- **CHECK ELECTRONIC MAPPING SYSTEM FOR MOST CURRENT MAPPING INFORMATION.**

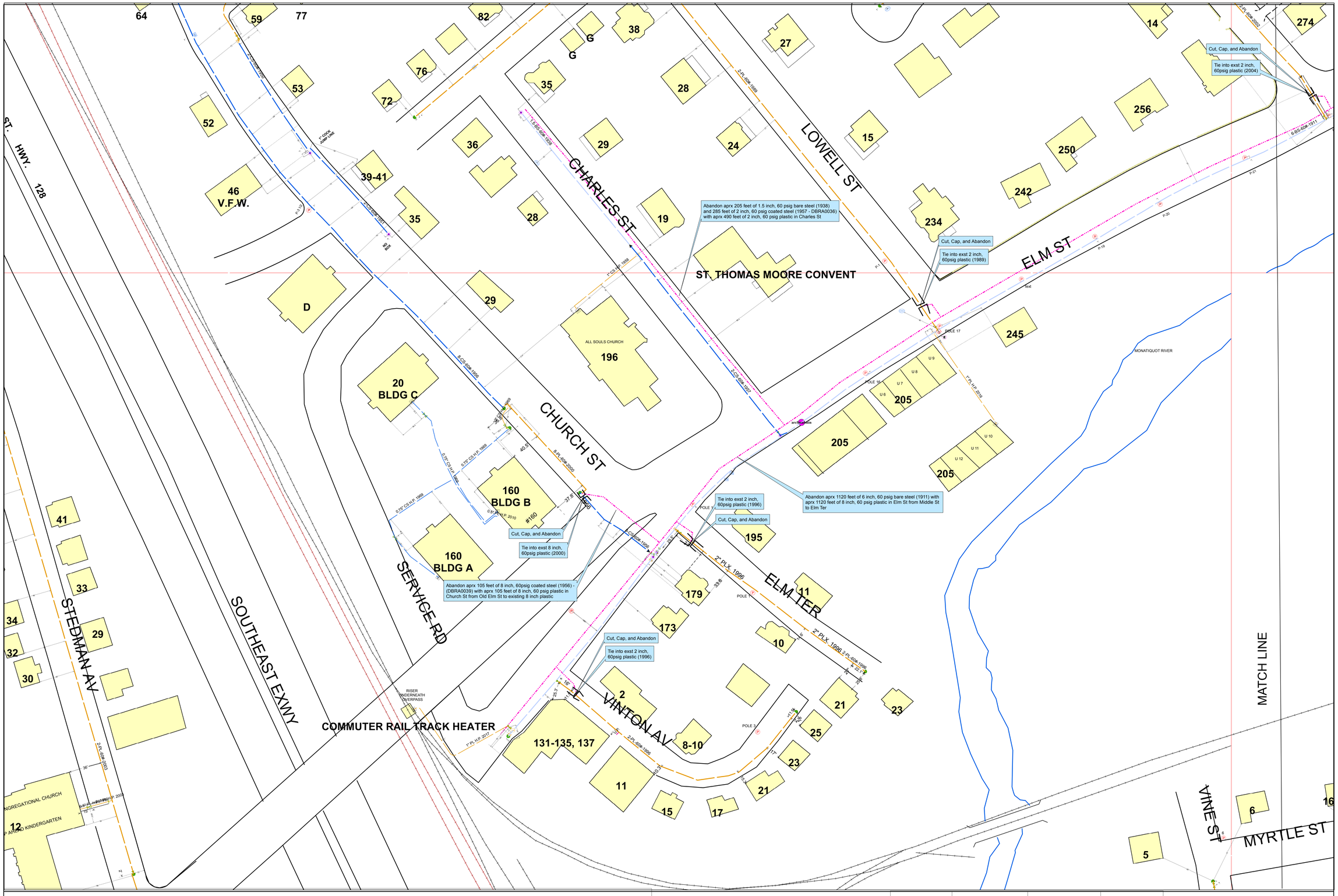

ENGINEERING DESIGN - Proposed Scope of Work

131-265 ELM ST, BRA, CHARLES ST & CHURCH ST

As part of the BSMNRPL Program, Main and Service Replacement recommends the relay of:
--> aprx 1120 feet of 6 inch, 60 psig bare steel (1911) with aprx 1120 feet of 8 inch, 60 psig plastic in Elm St from Middle St to Elm Ter
--> aprx 205 feet of 1.5 inch, 60 psig bare steel (1938) and 285 feet of 2 inch, 60 psig coated steel (1957 - DBRA0036) with aprx 490 feet of 2 inch, 60 psig plastic in Charles St
--> aprx 345 feet of 6 inch, 60 psig bare steel (1911) with 2 inch plastic in Old Elm St from end of main to existing 6 inch bare steel in Elm St
--> aprx 105 feet of 8 inch, 60psig coated steel (1956 - DBRA0039) with aprx 105 feet of 8 inch, 60 psig plastic in Church St from Old Elm St to existing 8 inch plastic

N

60 30 0 60 Feet

NOTE: The location of surface and underground objects shown are not warranted to be correct.

ENGINEER	GRLOGUE	SIZE	2/8 inch
DATE	**8/12/2019**	MATERIAL	PL
LENGTH	2060 Feet	PRESSURE	60 psig
SECTIONALS	BRAS1581	WORK ORDER #	1248756
	BRAS1582		
	BRAS1591		

ArcFM

nationalgrid

#20-032

Office of the Mayor

One JFK Memorial Drive
Braintree, Massachusetts 02184

Charles C. Kokoros
Mayor

781-794-8100

RECEIVED TOWN CLERK
BRAINTREE, MA
2020 FEB 20 PM 1:19

To: Shannon L. Hume, President of the Council
Susan Cimino, Clerk of the Council
James Casey, Town Clerk

From: Charles C. Kokoros, Mayor CCK

Cc: Nicole I. Taub, Acting Chief of Staff and Director of Operations
Edward Spellman, Director of Municipal Finance
Christine Stickney, Planning and Development Director

Date: February 18, 2020

Re: FY 2020 Supplemental Appropriation

As I previously stated, a priority of my administration is to move forward with an updated master plan for the Town of Braintree. To move this promise forward I am presenting for your approval the funding required for this project in the amount of $200,000.00.

To fund this request I propose transferring the unexpended sum of $64,492.20 from the article balance CO 14 021(1) Updating Zoning Ordinance and the balance of $135,507.80 is to come from a transfer from FY 2019 Certified Free Cash.

Accordingly, your review and approval of the following motion is requested:

Motion: That the amount of $64,492.20 be transferred from the Planning and Community Development Department Updating Zoning Ordinance article and $135,507.80 be transferred from FY 2019 Certified Free Cash for a total of $200,000.00 to Planning and Community Development Department Master Plan article.

Since these requests involve the appropriation of funds within the fiscal year 2020 budget, advertising and a public hearing is required under the sections 2-9 and 6-7 of the Town Charter.

#20-033

Office of the Mayor

One JFK Memorial Drive
Braintree, Massachusetts 02184

Charles C. Kokoros
Mayor

781-794-8100

RECEIVED TOWN CLERK
BRAINTREE, MA
2020 MAR 10 PM 4:47

To: Shannon L. Hume, President of the Council
Susan Cimino, Clerk of the Council
James Casey, Town Clerk

From: Charles C. Kokoros, Mayor CCK

Cc: Nicole I. Taub, Acting Chief of Staff and Director of Operations
Edward Spellman, Director of Municipal Finance
James Arsenault, Public Works Director
Lou Dutton, Water Sewer Superintendent

Date: March 10, 2020

Re: FY 2020 Supplemental Appropriation #3 PFAS Removal - Water Treatment Plant

---

The Tri Town Board has been meeting over the last year on the new regional water treatment plant and design options. The Tri-Town Board recently conducted voluntary testing for the emerging contaminant known as Per- and polyflouroalky substances (PFAS) as part of the design of the new Tri-Town Regional Water Treatment Plant. PFAS has been detected at low levels in the water supply for Braintree, Randolph and Holbrook averaging 24.5 parts per trillion. In November the board met with representatives from the Massachusetts Department of Environmental Protection to discuss this and regulations proposed at the time to reduce the state limit to below 70 parts per trillion. The Tri-Town water supply is tested for PFAS on a quarterly basis and as of January 3, 2020, the PFAS levels in our public water supply have been reduced to 21 ppt.

It is our commitment to reduce the levels of PFAS to be lower than 20 parts per trillion per MassDEP recommendation in our existing treatment plant. I have been meeting with James Arsenault, Public Works Director and Lou Dutton, Water Sewer Superintendent and Environmental Partners to explore options. After reviewing the options presented by Environmental Partners for the treatment of PFAS, we have determined that the Granular Activated Carbon (GAC) would be the best suitable application. The reasoning behind the decision was that, although all options will bring us below the 20 parts per trillion recommended

by the Massachusetts Department of Environmental Protection, the GAC will be able to be in place and operational in the shortest amount of time.

To move this process forward I am presenting for your approval the funding required for this project in the amount of $693,020. To fund this request, I propose transferring the amount of $693,020 FY 2019 Water Sewer Retained Earnings. The current Water Sewer Retained Earnings balance is $5,734,872.

Accordingly, your review and approval of the following motion is requested:

Motion: That the amount of $693,020 be transferred from FY 2019 certified Water Sewer Retained Earnings to Water Department Water Treatment Plant PFAS Removal System article.

Since these requests involve the appropriation of funds within the fiscal year 2020 budget, advertising and a public hearing is required under the sections 2-9 and 6-7 of the Town Charter.

#20-033

TOWN OF BRAINTREE
DEPARTMENT OF PUBLIC WORKS
85 Quincy Avenue
Braintree, Massachusetts 02184
Tel: 781-794-8254 Fax: 781-356-6803

Charles C. Kokoros
Mayor

James Arsenault, PE
Director

To: Charles C. Kokoros, Mayor

From: James Arsenault, P.E. J.A.

Cc: Nicole I. Taub, Acting Chief of Staff and Director of Operations
Edward Spellman, Director of Municipal Finance

Date: February 26, 2020

Re: FY 2020 Supplemental Appropriation Water Treatment Plant

After reviewing the attached report dated February 19, 2020, presented by Helen Gordon of Environmental Partners Group regarding the treatment of PFAS, we have determined that the Granular activated Carbon (GAC) would be the best suitable water treatment application to meet current state recommendations.

The reasoning behind the decision was that although all options noted will bring us below the 20 parts per trillion recommended by the Massachusetts Department of Environmental Protection, the GAC treatment application has the lowest starting price, good performance and will be able to be in place and operational in the shortest amount of time, most likely 2-3 weeks. The maintenance cost however is higher than other treatment applications due to the fact that the media will have to be replaced periodically which drives the overall price up. Although the slurry eductor powder activated carbon (PAC) has the lowest overall treatment application cost over the proposed four year period until the new treatment plant is built, the equipment needed to add the chemical will have to be ordered, shipped to site, engineered, piped, and installed. This will take a number of months to put into place. Also, the performance is noted as the lowest of the options and with the addition of the PAC there are drinking water residuals. The disposal of these residuals could very well drive the price of this treatment application above the GAC option. We feel confident that the GAC will give us the best performance and will be the most cost efficient for the Town.

#20-033

ENVIRONMENTAL PARTNERS

MEMORANDUM

Date: February 19, 2020

To Lou Dutton, Superintendent, Braintree Water & Sewer

From Helen Gordon, PE, BCEE, Adam Kran, PE and Alysa Longo – Environmental Partners

CC James Arsenault, PE, Director, Braintree DPW

Subject Braintree WTP – PFAS Removal System – Alternatives Analysis

Background

Per our memo to the Mayor of Braintree, dated January 30, 2020, Environmental Partners has completed an assessment of several alternative systems for PFAS removal at the Braintree Water Treatment Plant (WTP). The following options were evaluated on the basis of installation cost, effectiveness at removing PFAS, and operations and maintenance costs over a period of four years until the Tri-Town Regional Water Treatment Plan (TTRWTP) is commissioned:

- Silo and slurry eductor powder activated carbon system;
- Big bag unloader and slurry eductor powder activated carbon system;
- Retrofit existing filters with granular activated carbon media;
- Granular activated carbon vessels; and
- Ion exchange resin vessels.

In addition, EP assessed whether each alternative was available for rental or purchase, and identified availability and lead times of each system. A summary of each alternative, our analysis, and an opinion of probable cost is included here for your review. Once you've had an opportunity to review the analysis, we would like to schedule a meeting to discuss the alternatives.

Alternatives Analysis

Purchase a Silo and Slurry Eductor PAC System

EP worked with Sodimate to identify a silo and slurry eductor powder activated carbon (PAC) system to replace the WTP's hopper system, which is out of service due to the failure of its air filtration system. The bulk storage silo is a 36-foot high, steel, skirt-supported tank which could be installed north of the filter building, in between the footprint of the existing sedimentation basins, as shown in the attached Figure 1. The silo system is dust free and eliminates the need for manual addition of PAC. PAC would be delivered to Braintree WTP in bulk deliveries directly at the silo, at a lower cost per pound when compared to the individual 44-lb bag deliveries they currently receive. The slurry eductor system, installed underneath the silo within its steel skirt, creates a continuous PAC slurry which would be piped to the filter building and injected prior to the rapid mixing chamber.

A detailed opinion of probable cost for the silo and slurry eductor system is included in Attachment A, with a summary provided in the table below. All costs included in this memo are based on the Fourth Quarter 2019 Turner Building Cost Index of 1177. This alternative has one of the lowest installation costs and one of the lowest operations and maintenance (O&M) costs over a period of four years. The installation cost includes an estimate for engineering design, permitting, and construction administration work.

Table 1: Purchase of Silo & Slurry Eductor PAC System

Cost of Installation:	$521,320.00
Cost of Operation & Maintenance:	$501,300.00
Total Cost Over Four Years:	**$1,022,620.00**

It should be noted that the system requires a high dosage of PAC to consistently reduce PFAS levels to below the 20 ppt standard. Once the Town selects a PAC product, further jar testing should be conducted to confirm the optimal dose and to finalize the equipment sizing. Additionally, the use of PAC will increase the WTP's residuals production, thereby increasing their disposal costs. An estimate of the additional residuals management cost was included in the O&M cost, but further investigation is needed to better determine what volume will be produced. Any additional disposal costs would increase the operations and maintenance costs of this alternative.

The silo and eductor system will require 18 weeks for fabrication and delivery. The estimated installation time upon delivery of the equipment is two weeks. This is assuming the site modifications, including clearing, grading, and installation of the concrete pad are completed before delivery. The additional installation work required upon delivery includes: lifting the silo into position; assembling the discharge system, ladder, and guardrails; connecting the dry powder system to the slurry system, and; connecting the slurry system to the treatment plant. The slurry system is provided fully fabricated and skid-mounted, ready to be connected.

Rent a Big Bag Unloader and Slurry Eductor PAC System

If the Town is more interested in renting a PAC system for the approximately four years it will be in operation, Sodimate offers a big bag unloader in place of the silo. The unloader is designed to discharge "supersacs" of PAC, up to two tons in weight. Again, this system eliminates the need for operators to manually add PAC. Instead, the unloader automatically discharges PAC to the slurry eductor system, without compacting the product and without releasing dust. Both the unloader and eductor system would be installed north of the filter building, as shown in Figure 1, within a protective shed. The slurry is then piped to the filter building and injected prior to the rapid mixing chamber.

A detailed opinion of probable cost for renting the system is included in Attachment A, and a summary is provided in the table below. This alternative has the lowest operation and maintenance costs and one of the lowest installation costs. The installation cost includes an estimate for engineering design, permitting, and construction administration work.

Table 2: Rent Big Bag Unloader & Slurry Eductor PAC System

Cost of Installation:	$648,110.00
Cost of Operation & Maintenance:	$465,880.00
Total Cost Over Four Years:	**$1,113,990.00**

Again, further jar testing should be conducted to identify an optimal PAC dose once a PAC product has been selected by the Town. Based on previous jar testing, a high dose of PAC is expected to be needed to keep PFAS levels below the 20 ppt standard. An estimate of the additional residuals management cost was included in the O&M cost, but further investigation is needed to better determine what volume of additional residuals will be produced by the PAC. Any additional disposal costs would increase the operations and maintenance costs of this alternative. Currently, there are no units available for rental. Fabrication and delivery of a rental unloader and slurry educator system will take 10-12 weeks. Additional work required for installation of this unit includes some site clearing and grading, installation of a shed to protect the equipment from weather exposure, and installation of the injection piping to the filter building. The total estimated installation time after delivery is one week, assuming that the site work and prefabrication of the shed all take place before the system is delivered.

Retrofit Existing Filters with GAC Media

The Braintree WTP has five filters containing a media mix of gravel, sand, and anthracite. The anthracite in each filter could be removed and replaced with approximately 35 inches of granular activated carbon (GAC). The addition of the GAC would be sufficient to effectively reduce PFAS during filtration. As part of this retrofit, the surface wash agitators should be removed to allow the maximum depth of GAC media to be installed.

A detailed opinion of probable cost for retrofitting the filters is attached and a summary is provided in the table below. Retrofitting the filters is the alternative with the lowest installation cost, including an estimate for engineering design, permitting, and construction administration work. However, the GAC media will reach its PFAS reduction capability and require the media be changed out every six months to prevent bleed through. This results in the highest operation and maintenance cost over four years of use when compared to the other alternatives.

Table 3: Retrofit Filters with GAC Media	
Cost of Installation:	$430,560.00
Cost of Operation & Maintenance:	$2,166,000.00
Total Cost Over Four Years:	**$2,596,560.00**

The media could be delivered within two to three weeks, and the retrofit could begin almost immediately, one filter at a time, without requiring the plant to shut down.

Installation of GAC Vessels

GAC contactor vessels are the most common units being used for PFAS removal for both surface water and groundwater sources. Installed post-filtration, two trains including a lead and a lag vessel would be required to meet the plant's flow and water quality goals. These trains can be installed outside of the filter building, in between the footprint of the existing sedimentation basins (Figure 1), without requiring an enclosure. The GAC vessels can operate without PFAS breakthrough for twice as long as the retrofitted filters. After the initial virgin material is changed out, it can be regenerated offsite and then reused at the plant. Additionally, there is the potential for these vessels to be reused as redundant equipment at the future TTRWTP, although there is more analysis required to confirm this.

These vessels are available for both purchase and rental, with only a $30,000 installation cost difference between the two. The installation cost also includes an estimate for engineering design, permitting, and construction administration work for both alternatives. A summary is provided below, with a more detailed opinion of probable cost attached. The vessels have a low operation and maintenance cost since they do not require any maintenance work outside of regular backwashes (which can be automated) and media replacement every 14 months. However, these vessels require a large amount of additional piping to connect to the WTP, as well as expensive wet well and pumping upgrades to intercept the existing filter effluent pipeline.

Table 4: Purchase GAC Vessels	
Cost of Installation:	$2,065,860.00
Cost of Operation & Maintenance:	$564,680.00
Total Cost Over Four Years:	**$2,630,540.00**

Table 5: Rent GAC Vessels	
Cost of Installation:	$2,033,360.00
Cost of Operation & Maintenance:	$564,680.00
Total Cost Over Four Years:	**$2,598,040.00**

Vessels for rent are available immediately, and vessels for purchase can be fabricated in 14 weeks. There is at least one month of work required for curing the concrete pad before installation, and at least one month of work required for the piping modifications and connections to the existing plant after delivery.

Installation of IX Resin Vessels

Ion exchange (IX) resin vessels are similar to the GAC vessels in that they will be installed in the same location (Figure 1) and require similar piping, wet well, and pumping modifications. The resin will require periodic change outs, but will last almost twice as long as the GAC media and can reduce PFAS levels to 10 ppt or less. Once the ion exchange resin has experienced breakthrough, it cannot be regenerated.

These units are available for both purchase and rent, with the cost to rent the equipment adding a premium and making it the most expensive alternative to install. This installation cost also includes an estimate for engineering design, permitting, and construction administration work for both alternatives. A summary is provided below, with a more detailed opinion of probable cost attached. Although the IX resin requires less frequent change outs, it is a more expensive material and results in one of the higher operation and maintenance costs over a four year period. Note that two vessels in a lead-lag train are included in the purchase option, compared to four lead vessels included in the rental option. This affects both the volume and frequency of resin replacement.

Table 6: Purchase IX Resin Vessels

Cost of Installation:	$2,800,360.00
Cost of Operation & Maintenance:	$698,870.00
Total Cost Over Four Years:	**$3,499,230.00**

Table 7: Rent IX Resin Containers

Cost of Installation:	$4,394,580.00
Cost of Operation & Maintenance:	$643,430.00
Total Cost Over Four Years:	**$5,038,010.00**

The containers for rent are available immediately, and vessels for purchase will take 35 weeks to fabricate. There is at least one month of work required for curing the concrete pad before installation, and at least one month of work required after delivery for the piping modifications and connections to the existing treatment plant. There is also potential for these vessels to be reused at the future TTRWTP, although there is more analysis required to confirm this.

Summary

EP ranked each of the alternatives on the basis of installation cost, operations and maintenance costs over a period of four years, and on each system's PFAS reduction effectiveness. The rankings are included below, with number one being the most desirable system and number seven being the least desirable in each given category.

Table 8: Ranking by Installation Cost
1. Retrofit filters with GAC
2. Purchase silo & slurry eductor PAC system
3. Rent unloader & slurry eductor PAC system
4. Rent GAC vessels
5. Purchase GAC Vessels
6. Purchase IX resin vessels
7. Rent IX resin containers

Table 9: Ranking by O&M Cost
1. Rent unloader & slurry eductor PAC system
2. Purchase silo & slurry eductor PAC system
3. Purchase *or* Rent GAC vessels
4. Purchase IX vessels
5. Rent IX resin containers
6. Retrofit filters with GAC

Table 10: Ranking by PFAS Reduction Effectiveness
1. Purchase *or* Rent IX resin system
2. Purchase *or* Rent GAC vessels
3. Retrofit filters with GAC
4. Purchase *or* Rent Slurry Eductor PAC System

To more easily compare the total costs of each alternative, the table below includes installation cost, operation and maintenance costs, and the total costs over four years for each system.

Table 11: Summary of Opinion of Probable Costs

	Installation	O&M Over 4 Years	**Total**
Purchase of Silo & Slurry Eductor PAC System	$521,320.00	$501,300.00	**$1,022,620.00**
Rent Big Bag Unloader & Slurry Eductor PAC System	$648,110.00	$465,880.00	**$1,113,990.00**
Retrofit Filters with GAC Media	$430,560.00	$2,166,000.00	**$2,596,560.00**
Rent GAC Vessels	$2,033,360.00	$564,680.00	**$2,598,040.00**
Purchase GAC Vessels	$2,065,860.00	$564,680.00	**$2,630,540.00**
Purchase IX Resin Vessels	$2,800,360.00	$698,870.00	**$3,499,230.00**
Rent IX Resin Containers	$4,394,580.00	$643,430.00	**$5,038,010.00**

In addition to these categories, the pros and cons of each alternative was analyzed and a list is included below.

	Pros	Cons
Purchase Silo & Slurry Eductor PAC System	- Low installation cost - Low O&M cost	- Requires high PAC dosage to reduce PFAS - Additional residuals management costs - Requires 18 weeks to fabricate
Rent Unloader & Slurry Eductor PAC System	- Low installation cost - Lowest O&M cost	- Requires high PAC dosage to reduce PFAS - Additional residuals management costs - No slurry units are currently available, would require 10-12 weeks to fabricate
Retrofit Filters with GAC	- Lowest installation cost - GAC media is readily available and can be delivered in 2-3 weeks - Filters can be retrofitted & operational sooner than other alternatives	- Highest O&M cost - Existing filter media was recently replaced by the Town
Purchase GAC Vessels	- Low O&M cost - Media can be regenerated - Can be fabricated in 14 weeks	- High installation cost - Installation will require at least 1-2 months of site work and piping modifications
Rent GAC Vessels	- Low O&M cost - Media can be regenerated - Units for rent are immediately available	- Installation will require at least 1-2 months of site work and piping modifications
Purchase IX Resin Vessels	- Can reduce PFAS to non-detect levels	- High installation cost - High O&M cost - Requires 35 weeks to fabricate in addition to at least 1-2 months of site work and piping modifications - Resin cannot be regenerated
Rent IX Resin Containers	- Can reduce PFAS to non-detect levels - Units for rent are immediately available	- Highest installation cost - High O&M cost - Installation will require at least 1-2 months of site work and piping modifications - Resin cannot be regenerated

Recommendation

Upon completing our assessment of each of the proposed alternatives, EP recommends the Town consider the PAC systems as the most advantageous option for the interim PFAS reduction system. By either renting the big bag unloader and slurry eductor or purchasing the silo and slurry eductor, Braintree WTP can reduce PFAS levels at a low installation and a low operations and maintenance cost. In addition, the WTP operators and MassDEP are already familiar with the addition of PAC at the plant. Finally, either system will provide more PFAS reduction and better PAC dosing control in a dust-free environment and in a less labor-intensive manner than the existing hopper system.

EP also recommends that the Town begin discussions with the Tri-Town Board of Water Commissioners, recommending preliminary investigations into the source of PFAS within Great Pond. Potential identification and remediation of pollutants is always a preference to implementation of treatment processes at municipal water treatment plants. If a source and responsible party can be identified costs of either remediation or treatment could be assessed against the entity identified.

Once you've had an opportunity to review the analysis and recommendation for a new PFAS removal system, EP would like to schedule a meeting to discuss these alternatives at your earliest convenience.

Attachments

Figure 1 – Proposed Area of Installation

Attachment A – Opinion of Probable Costs

Attachment B – Equipment Cut sheets

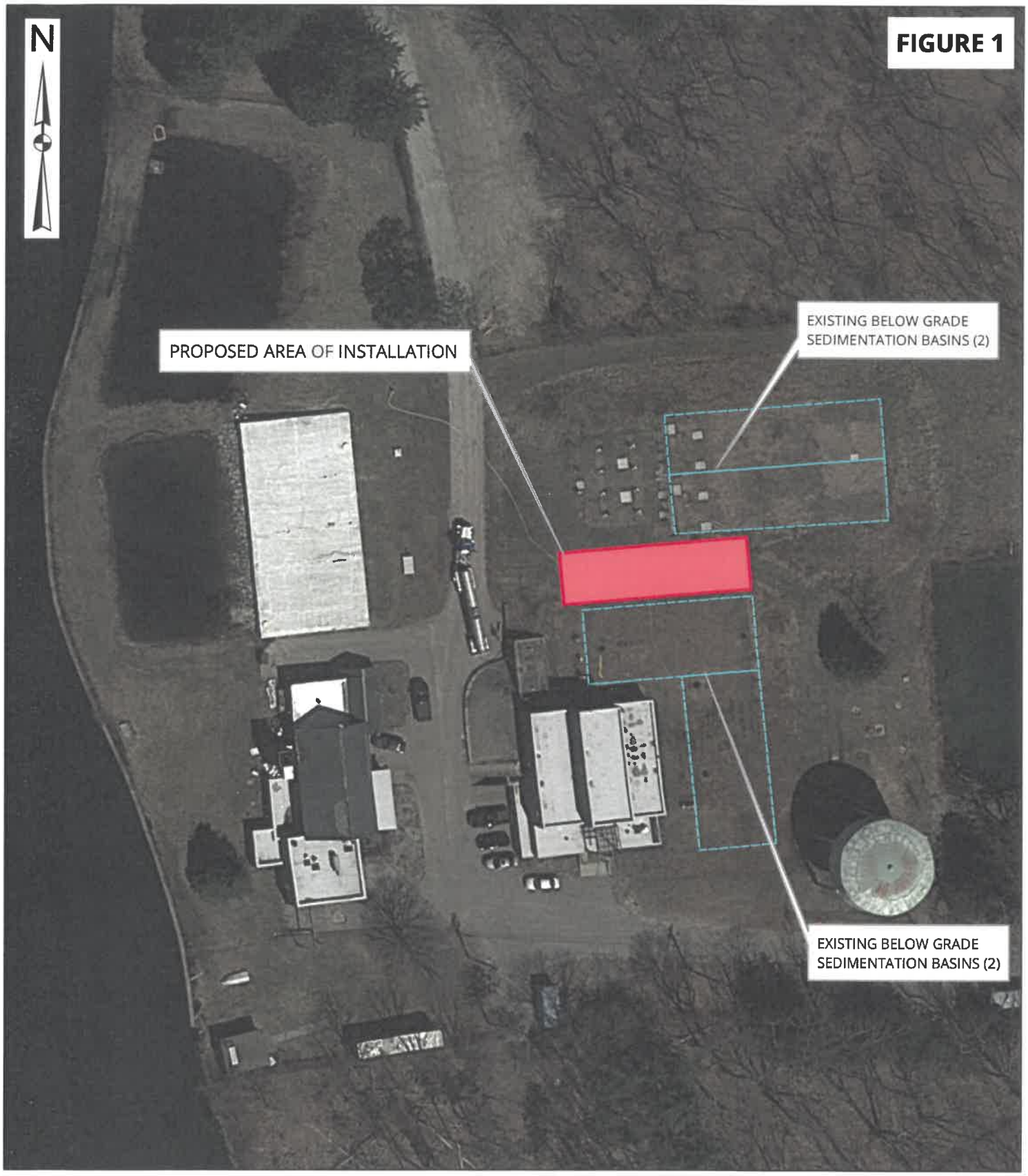

ENVIRONMENTAL PARTNERS

Proposed Area of Installation
Braintree WTP Alternative PAC System
February 2020

0 25 50 100 150 Feet

1 inch = 60 feet

TOWN OF BRAINTREE INCORPORATED 1640 MASSACHUSETTS

ATTACHMENT A

Opinion of Probable Costs

Braintree Great Pond Water Treatment Plant
PFAS Removal System
Engineers Opinion of Probable Cost

Retrofit Filters with GAC						
Work Item Description	Unit of Measure	Approx. Quantity	Unit Price	Unit Price Material	Unit Price Labor	**Estimated Cost**
Cost of Installation:						
Demolish Surface Washers	EA	20	$120.00	$0.00	$120.00	$2,400.00
Replace Anthracite with 34.7" GAC Media	LB	136,750	$1.92	$1.00	$0.92	$262,560.00
Legally Dispose of Spent Anthracite	TON	60	$165.00	$0.00	$165.00	$9,900.00
				Subtotal	*$*	*264,960.00*
				30% Contingency	*$*	*79,488.00*
				Installation Subtotal	*$*	*344,448.00*
				25% Engineering[1]	*$*	*86,112.00*
				Total Cost of Installation	***$***	***430,560.00***
Work Item Description	Unit of Measure	Approx. Quantity	Unit Price	Unit Price Material	Unit Price Labor	**Estimated Cost**
Cost to Operate:						
Year 1 - Operation & Maintenance[2]	LS	0	$0.00	$0.00	$0.00	$0.00
Year 1 - Spent GAC Media Replacement[3]	LS	1	$262,460.00	$136,650.00	$125,810.00	$262,460.00
Year 2 - Operation & Maintenance[2]	LS	0	$0.00	$0.00	$0.00	$0.00
Year 2 - Spent GAC Media Replacement[3]	LS	2	$266,240.00	$136,650.00	$129,590.00	$532,480.00
Year 3 - Operation & Maintenance[2]	LS	0	$0.00	$0.00	$0.00	$0.00
Year 3 - Spent GAC Media Replacement[3]	LS	2	$270,130.00	$136,650.00	$133,480.00	$540,260.00
Year 4 - Operation & Maintenance[2]	LS	0	$0.00	$0.00	$0.00	$0.00
Year 4 - Spent GAC Media Replacement[3]	LS	2	$274,140.00	$136,650.00	$137,490.00	$548,280.00
				Subtotal	*$*	*1,883,480.00*
				15% Contingency	*$*	*282,522.00*
				Total Cost of Operation	***$***	***2,166,000.00***

Notes:

1. Cost of Engineering will vary based on the bidding requirements, and may be reduced if the project is bid with an Emergency Waiver.

2. Where the Estimated Cost is $0.00, there are no costs associated with operation and maintenance anticipated for that year.

3. Further water quality testing is needed to confirm GAC bed life.

ENVIRONMENTAL PARTNERS

Braintree Great Pond Water Treatment Plant
PFAS Removal System
Engineers Opinion of Probable Cost

Purchase Silo System & Slurry Eductor PAC System

Work Item Description	Unit of Measure	Approx. Quantity	Unit Price	Unit Price Material	Unit Price Labor	Estimated Cost
Cost of Installation:						
Demolish Existing Hopper	LS	1	$1,000.00	$0.00	$1,000.00	$1,000.00
Silo and Slurry Eductor System	EA	1	$245,100.00	$163,400.00	$81,700.00	$245,100.00
Clearing and Grubbing	SF	1,200	$3.00	$0.00	$3.00	$3,600.00
Site Grading	SY	130	$15.00	$10.00	$5.00	$1,950.00
Equipment Pad	CY	4	$450.00	$300.00	$150.00	$1,800.00
1" Sch. 80 PVC Piping	LF	90	$52.00	$40.00	$12.00	$4,680.00
Pipe Insulation	LF	90	$2.00	$1.00	$1.00	$180.00
Misc. Piping, Fittings, & Appurtenances	LS	1	$25,000.00	10%		$25,000.00
Electrical Work	LS	1	$37,500.00	15%		$37,500.00
Instrumentation Wiring and SCADA Programming	LS	1	$50,000.00	20%		$50,000.00
				Subtotal	*$*	*320,810.00*
				30% Contingency	*$*	*96,243.00*
				Installation Subtotal	*$*	*417,053.00*
				25% Engineering [1]	*$*	*104,263.25*
				Total Cost of Installation	***$***	***521,320.00***

Work Item Description	Unit of Measure	Approx. Quantity	Unit Price	Unit Price Material	Unit Price Labor	Estimated Cost
Cost to Operate:						
Year 1 - Operation & Maintenance[2]	LS	0	$22,000.00	$7,500.00	$14,500.00	$0.00
Year 1 - Powder Activated Carbon	LS	1	$69,700.00	$69,700.00	$0.00	$69,700.00
Year 1 - Residuals Management[2]	CY	0	$76.75	$0.00	$76.75	$0.00
Year 2 - Operation & Maintenance	LS	1	$22,500.00	$7,500.00	$15,000.00	$22,500.00
Year 2 - Powder Activated Carbon	LS	1	$75,870.00	$75,870.00	$0.00	$75,870.00
Year 2 - Residuals Management[3]	CY	445	$80.00	$0.00	$80.00	$35,600.00
Year 3 - Operation & Maintenance[2]	LS	0	$23,000.00	$7,500.00	$15,500.00	$0.00
Year 3 - Powder Activated Carbon	LS	1	$82,040.00	$82,040.00	$0.00	$82,040.00
Year 3 - Residuals Management[2]	CY	0	$83.25	$0.00	$83.25	$0.00
Year 4 - Operation & Maintenance	LS	1	$23,500.00	$7,500.00	$16,000.00	$23,500.00
Year 4 - Powder Activated Carbon	LS	1	$88,210.00	$88,210.00	$0.00	$88,210.00
Year 4 - Residuals Management[3]	CY	445	$86.50	$0.00	$86.50	$38,492.50
				Subtotal	*$*	*435,912.50*
				15% Contingency	*$*	*65,386.88*
				Total Cost of Operation	***$***	***501,300.00***

Notes:

1. Cost of Engineering will vary based on the bidding requirements, and may be reduced if the project is bid with an Emergency Waiver.

2. Where the Estimated Cost is $0.00, there are no costs associated with operation, maintenance, or residuals management anticipated for that year.

3. Cost of residuals management due to the addition of PAC is subject to change: current assumption is based on emptying two geotubes every two years.

ENVIRONMENTAL PARTNERS

Braintree Great Pond Water Treatment Plant
PFAS Removal System
Engineers Opinion of Probable Cost

Rent Unloader & Slurry Eductor PAC System

Work Item Description	Unit of Measure	Approx. Quantity	Unit Price	Unit Price Material	Unit Price Labor	Estimated Cost
Cost of Installation:						
Demolish Existing Hopper	LS	1	$1,000.00	$0.00	$1,000.00	$1,000.00
PAC Shed	LS	1	$35,000.00	$25,000.00	$10,000.00	$35,000.00
Big Bag Hopper and Slurry Eductor System	EA	1	$258,720.00	$235,200.00	$23,520.00	$258,720.00
1" Sch. 80 PVC Piping	LF	5	$52.00	$40.00	$12.00	$260.00
Equipment Pad	CY	5	$52.50	$35.00	$17.50	$262.50
Electrical Work	LS	1	$51,796.00	20%		$51,796.00
Instrumentation Wiring and SCADA Programming	LS	1	$51,796.00	20%		$51,796.00
				Subtotal	*$*	*398,834.50*
				30% Contingency	*$*	*119,650.35*
				Installation Subtotal	*$*	*518,484.85*
				25% Engineering[1]	*$*	*129,621.21*
				Total Cost of Installation	***$***	***648,110.00***

Work Item Description	Unit of Measure	Approx. Quantity	Unit Price	Unit Price Material	Unit Price Labor	Estimated Cost
Cost to Operate:						
Year 1 - Operation & Maintenance[2]	LS	0	$7,400.00	$2,500.00	$4,900.00	$0.00
Year 1 - Powder Activated Carbon	LS	1	$69,700.00	$69,700.00	$0.00	$69,700.00
Year 1 - Residuals Management[2]	CY	0	$76.75	$0.00	$76.75	$0.00
Year 2 - Operation & Maintenance	LS	1	$7,500.00	$2,500.00	$5,000.00	$7,500.00
Year 2 - Powder Activated Carbon	LS	1	$75,870.00	$75,870.00	$0.00	$75,870.00
Year 2 - Residuals Management[3]	CY	445	$80.00	$0.00	$80.00	$35,600.00
Year 3 - Operation & Maintenance[2]	LS	0	$7,600.00	$2,500.00	$5,100.00	$0.00
Year 3 - Powder Activated Carbon	LS	1	$82,040.00	$82,040.00	$0.00	$82,040.00
Year 3 - Residuals Management[2]	CY	0	$83.25	$0.00	$83.25	$0.00
Year 4 - Operation & Maintenance	LS	1	$7,700.00	$2,500.00	$5,200.00	$7,700.00
Year 4 - Powder Activated Carbon	LS	1	$88,210.00	$88,210.00	$0.00	$88,210.00
Year 4 - Residuals Management[3]	CY	445	$86.50	$0.00	$86.50	$38,492.50
				Subtotal	*$*	*405,112.50*
				15% Contingency	*$*	*60,766.88*
				Total Cost of Operation	***$***	***465,880.00***

Note:

1. Cost of Engineering will vary based on the bidding requirements, and may be reduced if the project is bid with an Emergency Waiver.

2. Where the Estimated Cost is $0.00, there are no costs associated with operation, maintenance, or residuals management anticipated for that year.

3. Cost of residuals management due to the addition of PAC is subject to change: current assumption is based on emptying two geotubes every two years.

ENVIRONMENTAL PARTNERS

Braintree Great Pond Water Treatment Plant
PFAS Removal System
Engineers Opinion of Probable Cost

Purchase New GAC Units						
Work Item Description	Unit of Measure	Approx. Quantity	Unit Price	Unit Price Material	Unit Price Labor	**Estimated Cost**
Cost of Installation:						
Clearing and Grubbing	SF	1,200	$3.00	$0.00	$3.00	$3,600.00
Site Grading	SY	130	$15.00	$10.00	$5.00	$1,950.00
Wet Well and Filter Effluent Piping Upgrades	LS	1	$150,000.00	$100,000.00	$50,000.00	$150,000.00
Equipment Pad	CY	35	$450.00	$300.00	$150.00	$15,750.00
GAC Filter and Media	EA	4	$181,500.00	$165,000.00	$16,500.00	$726,000.00
Exterior Piping	LS	1	$254,000.00	$191,000.00	$63,000.00	$254,000.00
Electrical Work	LS	1	$70,000.00	$40,000.00	$30,000.00	$70,000.00
Instrumentation Wiring and SCADA Programming	LS	1	$50,000.00	$30,000.00	$20,000.00	$50,000.00
				Subtotal	*$*	*1,271,300.00*
				30% Contingency	*$*	*381,390.00*
				Installation Subtotal	*$*	*1,652,690.00*
				25% Engineering [1]	*$*	*413,172.50*
				Total Cost of Installation	***$***	***2,065,860.00***
Work Item Description	Unit of Measure	Approx. Quantity	Unit Price	Unit Price Material	Unit Price Labor	**Estimated Cost**
Cost to Operate:						
Year 1 - Operation & Maintenance[2]	LS	0	$0.00	$0.00	$0.00	$0.00
Year 1 - Spent GAC Media Replacement[2]	LS	0	$159,900.00	$100,000.00	$59,900.00	$0.00
Year 2 - Operation & Maintenance[2]	LS	0	$0.00	$0.00	$0.00	$0.00
Year 2 - Spent GAC Media Replacement	LS	1	$161,800.00	$100,000.00	$61,800.00	$161,800.00
Year 3 - Operation & Maintenance[2]	LS	0	$0.00	$0.00	$0.00	$0.00
Year 3 - Spent GAC Media Replacement	LS	1	$163,660.00	$100,000.00	$63,660.00	$163,660.00
Year 4 - Operation & Maintenance[2]	LS	0	$0.00	$0.00	$0.00	$0.00
Year 4 - Spent GAC Media Replacement	LS	1	$165,570.00	$100,000.00	$65,570.00	$165,570.00
				Subtotal	*$*	*491,030.00*
				15% Contingency	*$*	*73,654.50*
				Total Cost of Operation	***$***	***564,680.00***

Notes:

1. Cost of Engineering will vary based on the bidding requirements, and may be reduced if the project is bid with an Emergency Waiver.

2. Where the Estimated Cost is $0.00, there are no costs associated with operation, maintenance, or media replacement anticipated for that year.

ENVIRONMENTAL PARTNERS

Braintree Great Pond Water Treatment Plant
PFAS Removal System
Engineers Opinion of Probable Cost

Rent New GAC Units						
Work Item Description	Unit of Measure	Approx. Quantity	Unit Price	Unit Price Material	Unit Price Labor	**Estimated Cost**
Cost of Installation:						
Clearing and Grubbing	SF	1,200	$3.00	$0.00	$3.00	$3,600.00
Site Grading	SY	130	$15.00	$10.00	$5.00	$1,950.00
Wet Well and Filter Effluent Piping Upgrades	LS	1	$150,000.00	$100,000.00	$50,000.00	$150,000.00
Equipment Pad	CY	35	$450.00	$300.00	$150.00	$15,750.00
GAC Filter System	EA	4	$136,500.00	$120,000.00	$16,500.00	$546,000.00
GAC Media	EA	4	$40,000.00	$25,000.00	$15,000.00	$160,000.00
Exterior Piping	LS	1	$254,000.00	$191,000.00	$63,000.00	$254,000.00
Electrical Work	LS	1	$70,000.00	$40,000.00	$30,000.00	$70,000.00
Instrumentation Wiring and SCADA Programming	LS	1	$50,000.00	$30,000.00	$20,000.00	$50,000.00
				Subtotal	*$*	*1,251,300.00*
				30% Contingency	*$*	*375,390.00*
				Installation Subtotal	*$*	*1,626,690.00*
				25% Engineering[1]	*$*	*406,672.50*
				Total Cost of Installation	***$***	***2,033,360.00***
Work Item Description	Unit of Measure	Approx. Quantity	Unit Price	Unit Price Material	Unit Price Labor	**Estimated Cost**
Cost to Operate:						
Year 1 - Operation & Maintenance[2]	LS	0	$0.00	$0.00	$0.00	$0.00
Year 1 - Spent GAC Media Replacement[2]	LS	0	$0.00	$0.00	$0.00	$0.00
Year 2 - Operation & Maintenance[2]	LS	0	$0.00	$0.00	$0.00	$0.00
Year 2 - Spent GAC Media Replacement	LS	1	$161,800.00	$100,000.00	$61,800.00	$161,800.00
Year 3 - Operation & Maintenance[2]	LS	0	$0.00	$0.00	$0.00	$0.00
Year 3 - Spent GAC Media Replacement	LS	1	$163,660.00	$100,000.00	$63,660.00	$163,660.00
Year 4 - Operation & Maintenance[2]	LS	0	$0.00	$0.00	$0.00	$0.00
Year 4 - Spent GAC Media Replacement	LS	1	$165,570.00	$100,000.00	$65,570.00	$165,570.00
				Subtotal	*$*	*491,030.00*
				15% Contingency	*$*	*73,654.50*
				Total Cost of Operation	***$***	***564,680.00***

Notes:

1. Cost of Engineering will vary based on the bidding requirements, and may be reduced if the project is bid with an Emergency Waiver.

2. Where the Estimated Cost is $0.00, there are no costs associated with operation, maintenance, or media replacement anticipated for that year.

ENVIRONMENTAL PARTNERS

Braintree Great Pond Water Treatment Plant
PFAS Removal System
Engineers Opinion of Probable Cost

Rent Ion Exchange Resin Units						
Work Item Description	Unit of Measure	Approx. Quantity	Unit Price	Unit Price Material	Unit Price Labor	**Estimated Cost**
Cost to Operate:						
Clearing and Grubbing	SF	1,200	$3.00	$0.00	$3.00	$3,600.00
Site Grading	SY	130	$15.00	$10.00	$5.00	$1,950.00
Wet Well and Filter Effluent Piping Upgrades	LS	1	$150,000.00	$100,000.00	$50,000.00	$150,000.00
Equipment Pad	CY	35	$450.00	$300.00	$150.00	$15,750.00
IX Filter Container	EA	2	$893,375.00	$893,375.00		$1,786,750.00
IX Resin (Per Container)	EA	2	$186,153.00	$186,153.00		$372,306.00
Exterior Piping	LS	1	$254,000.00	$191,000.00	$63,000.00	$254,000.00
Electrical Work	LS	1	$70,000.00	$40,000.00	$30,000.00	$70,000.00
Instrumentation Wiring and SCADA Programming	LS	1	$50,000.00	$30,000.00	$20,000.00	$50,000.00
				Subtotal	*$*	*2,704,356.00*
				30% Contingency	*$*	*811,306.80*
				Installation Subtotal	*$*	*3,515,662.80*
				25% Engineering [1]	*$*	*878,915.70*
				Total Cost of Installation	***$***	***4,394,580.00***
Work Item Description	Unit of Measure	Approx. Quantity	Unit Price	Unit Price Material	Unit Price Labor	**Estimated Cost**
Cost to Operate:						
Year 1 - Operation & Maintenance[2]	LS	0	$0.00	$0.00	$0.00	$0.00
Year 1 - Spent Resin Replacement[2]	CF	0	$139,425.00	$124,200.00	$15,225.00	$0.00
Year 2 - Operation & Maintenance[2]	LS	0	$0.00	$0.00	$0.00	$0.00
Year 2 - Spent Resin Replacement	EA	2	$139,650.00	$124,200.00	$15,450.00	$279,300.00
Year 3 - Operation & Maintenance[2]	LS	0	$0.00	$0.00	$0.00	$0.00
Year 3 - Spent Resin Replacement[2]	CF	0	$139,875.00	$124,200.00	$15,675.00	$0.00
Year 4 - Operation & Maintenance[2]	LS	0	$0.00	$0.00	$0.00	$0.00
Year 4 - Spent Resin Replacement	EA	2	$140,100.00	$124,200.00	$15,900.00	$280,200.00
				Subtotal	*$*	*559,500.00*
				15% Contingency	*$*	*83,925.00*
				Total Cost of Operation	***$***	***643,430.00***

Notes:

1. Cost of Engineering will vary based on the bidding requirements, and may be reduced if the project is bid with an Emergency Waiver.

2. Where the Estimate Cost is $0.00, there are no costs associated with operation, maintenance, or resin replacement anticipated for that year.

ENVIRONMENTAL PARTNERS

Braintree Great Pond Water Treatment Plant
PFAS Removal System
Engineers Opinion of Probable Cost

Purchase New Ion Exchange Resin Units						
Work Item Description	Unit of Measure	Approx. Quantity	Unit Price	Unit Price Material	Unit Price Labor	**Estimated Cost**
Cost to Operate:						
Clearing and Grubbing	SF	1,200	$3.00	$0.00	$3.00	$3,600.00
Site Grading	SY	130	$15.00	$10.00	$5.00	$1,950.00
Wet Well and Filter Effluent Piping Upgrades	LS	1	$150,000.00	$100,000.00	$50,000.00	$150,000.00
Equipment Pad	CY	35	$450.00	$300.00	$150.00	$15,750.00
IX Filter Vessel	EA	2	$295,000.00	$245,000.00	$50,000.00	$590,000.00
IX Resin (Per Vessel)	EA	2	$294,000.00	$264,000.00	$30,000.00	$588,000.00
Exterior Piping	LS	1	$254,000.00	$191,000.00	$63,000.00	$254,000.00
Electrical Work	LS	1	$70,000.00	$40,000.00	$30,000.00	$70,000.00
Instrumentation Wiring and SCADA Programming	LS	1	$50,000.00	$30,000.00	$20,000.00	$50,000.00
				Subtotal	*$*	*1,723,300.00*
				30% Contingency	*$*	*516,990.00*
				Installation Subtotal	*$*	*2,240,290.00*
				25% Engineering[1]	*$*	*560,072.50*
				Total Cost of Installation	***$***	***2,800,360.00***
Work Item Description	Unit of Measure	Approx. Quantity	Unit Price	Unit Price Material	Unit Price Labor	**Estimated Cost**
Cost to Operate:						
Year 1 - Operation & Maintenance	LS	1	$12,000.00	$10,000.00	$2,000.00	$12,000.00
Year 1 - Spent Resin Replacement[2]	CF	0	$279,225.00	$264,000.00	$15,225.00	$0.00
Year 2 - Operation & Maintenance	LS	1	$12,060.00	$10,000.00	$2,060.00	$12,060.00
Year 2 - Spent Resin Replacement	EA	1	$279,450.00	$264,000.00	$15,450.00	$279,450.00
Year 3 - Operation & Maintenance	LS	1	$12,120.00	$10,000.00	$2,120.00	$12,120.00
Year 3 - Spent Resin Replacement[2]	CF	0	$279,675.00	$264,000.00	$15,675.00	$0.00
Year 4 - Operation & Maintenance	LS	1	$12,180.00	$10,000.00	$2,180.00	$12,180.00
Year 4 - Spent Resin Replacement	EA	1	$279,900.00	$264,000.00	$15,900.00	$279,900.00
				Subtotal	*$*	*607,710.00*
				15% Contingency	*$*	*91,156.50*
				Total Cost of Operation	***$***	***698,870.00***

Notes:
1. Cost of Engineering will vary based on the bidding requirements, and may be reduced if the project is bid with an Emergency Waiver.
2. Where the Estimated Cost is $0.00, there are no costs associated with operation, maintenance, or resin replacement anticipated for that year.

ENVIRONMENTAL PARTNERS

ATTACHMENT B

Equipment Cutsheets

PAC Silo

Sodimate®

Powder handling expert

Bulk Storage Silo

Wastewater Treatment | Water Treatment | Flue Gas Treatment

Bulk Storage Steel Silo

Bulk storage silos made of steel are the perfect solution to store powdered reagents like hydrated lime, activated carbon, soda ash, and many other dry chemical powders. The cylindrical shape and the conical bottom allow a complete discharge of the product when combined with a mechanical arch breaker.

With a volume ranging from 200 to 7,000 ft^3, Sodimate helps to choose the right diameter and height of silos to comply with the technical definition of the customer.

Silos can be legged with a steel frame, with a skirt (to implement a room) or attached on a pad to be suspended through a concrete ceiling.

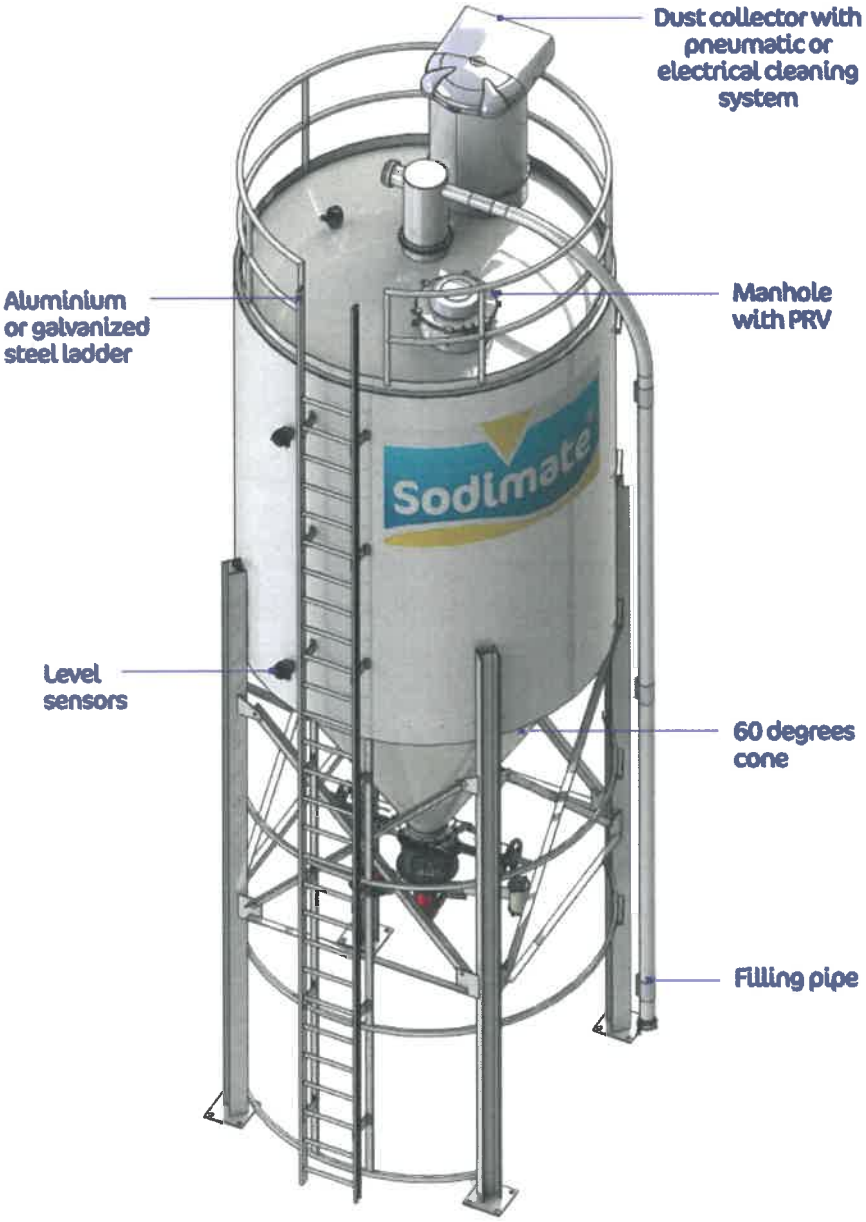

Advantages:

- Custom made silos in one-piece construction
- Protective linings and coatings
- ASME certification
- On-site delivery and installation
- Huge storage capacity
- Low maintenance cost

Sodimate®

Powder handling expert

Wastewater Treatment | Water Treatment | Flue Gas Treatment

Redundancy with stairway to access on both roofs

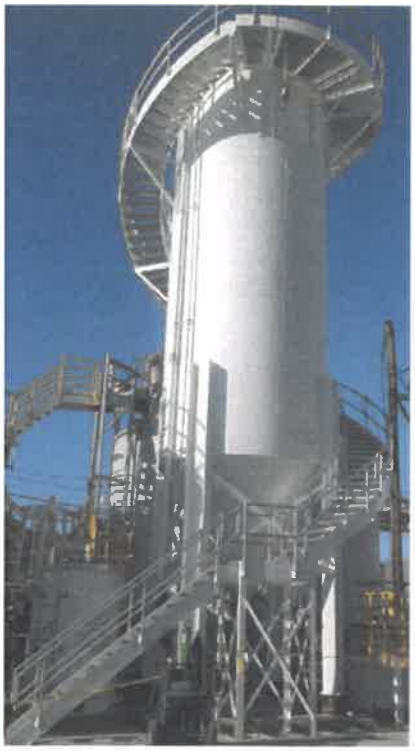

Skirted silo with stairway

Legged silo

Optional features:

- Load cells
- Skirt (room under the silo)
- Insulation
- Junction box at the ground level
- Safety cage OSHA compliant
- Stairway OSHA compliant
- Heater and thermostat
- Lighnting
- Specific color and lining
- Explosion proof vent

SILO HEIGHT(ft)

	300 ft^3	500 ft^3	750 ft^3	1000 ft^3	1500 ft^3	2500 ft^3	3500 ft^3	5000 ft^3
Ø10 ft	18'6"	21'1"	24'3"					
Ø12 ft			22'9"	25'1"	27'7"	38'6"	47'6"	60'11"
Ø14 ft						34'1"	40'8"	50'5"

*Height and capacity vary regarding the silo volume

Load cells for skirted silo

2950 W. Chicago Ave., Ste 205, Chicago IL 60622
Tel: 773-665-8800 Fax: 773-665-8805
www.sodimate-inc.com

PAC Slurry Eductor

Sodimate®

Powder handling expert

Slurry Eductor

Waste water Treatment | Water Treatment | Flue Gas Treatment

Slurry Eductor

Sodimate liquid/slurry eductors have been installed with a broad range of products such as micro sand, limestone, powder activated carbon, etc.

Applications of Sodimate slurry eductors range from adding a few pounds per hour to transporting over thousands of pounds per hour.

Sodimate Slurry eductor eliminates the use of slurry mixing tank, reduces the electrical consumption and floor footprint. The resulting slurry can be transfer horizontally and vertically with few pound of pressure at the process end injection point.

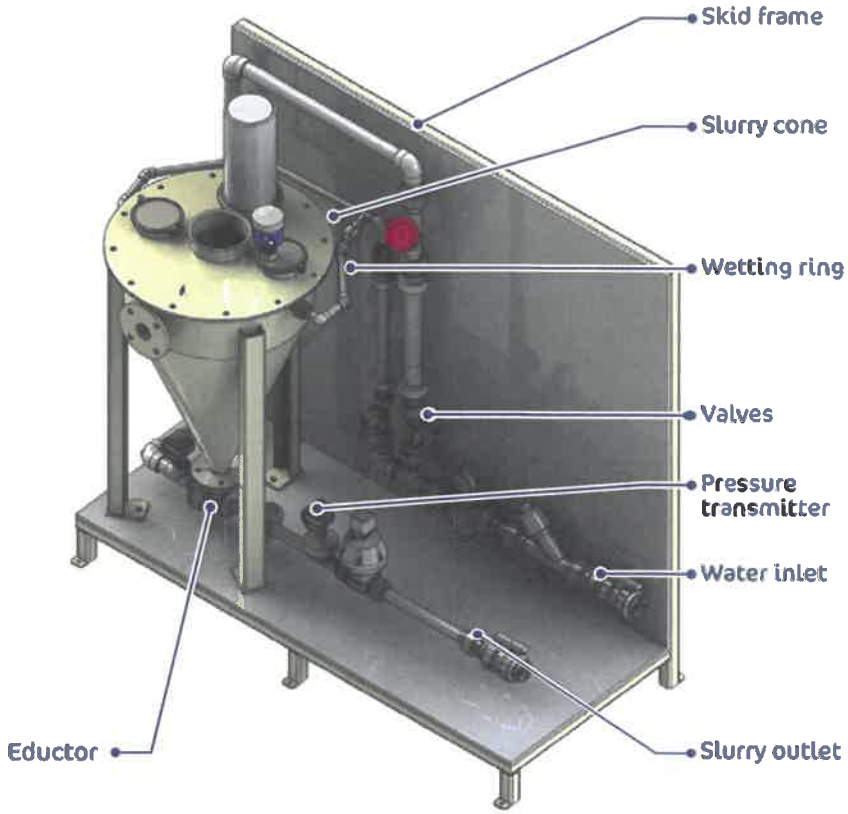

Advantages

- Dust free
- Long transfer distances with elevations and back pressure
- Low energy consumption
- Can be mounted on a skid
- Optional instrumentation

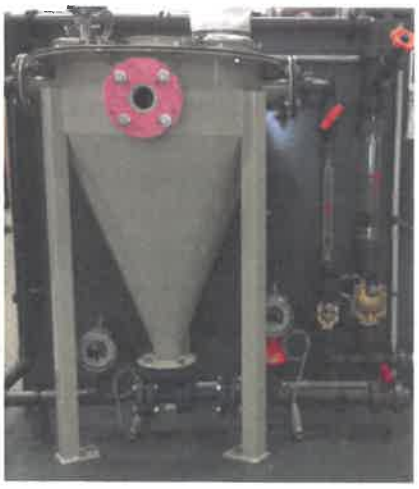

Sodimate®

Powder handling expert

Wastewater Treatment | Water Treatment | Flue Gas Treatment

Operation Principle

Sodimate slurry eductors use water or other liquids under pressure as the motive fluid, and operate on the venturi principle to mix dry chemicals into slurries.

Water is constantly injected inside the slurry cone to provide instantaneous hydration, reduce dust, and avoid clumps and 'fish-eyes'. The high-velocity jet of liquid from the eductor nozzle creates a vacuum, which causes the suction of the mixed liquid.

Eductors are an ideal way to continuously produce solutions or well blended slurries and are commonly used in chemical, food, power, pharmaceutical, and waste water applications.

The slurry eductor can be supplied with all necessary flow, pressure, control and regulation instrumentation.

Features

- **Slurry transfer without mixing tank**
- **Can be adapted to existing process**
- **Dust free unit system**

Options

- **Contact parts made of stainless steel**
- **Explosion proof instrumentation**
- **Skid mounted system**

Examples of transferred products
Powder activated carbon
Polymer
Soda Ash
Microsand

Ejector Size	Powder throughput
1"	2.2 gpm max
2"	4.4 gpm max
3"	11 gpm max
4"	22 gpm max

2950 W. Chicago Ave., Ste 205, Chicago IL 60622
Tel: 773-665-8800 Fax: 773-665-8805
www.sodimate-inc.com

PAC Big Bag Unloader

Sodimate®

Powder handling expert

Big Bag Unloader

Wastewater Treatment | Water Treatment | Flue Gas Treatment

Discharger and Feeder for Big Bags / Bulk Bags / FIBC :

The Big Bag Unloader is engineered to discharge up to 2 ton supersacs, ensuring an automatic and complete discharge of the dry chemical without product compaction.

The structure of the unloader can accept big bags loaded by forklift or can integrate manual or electrical hoists.

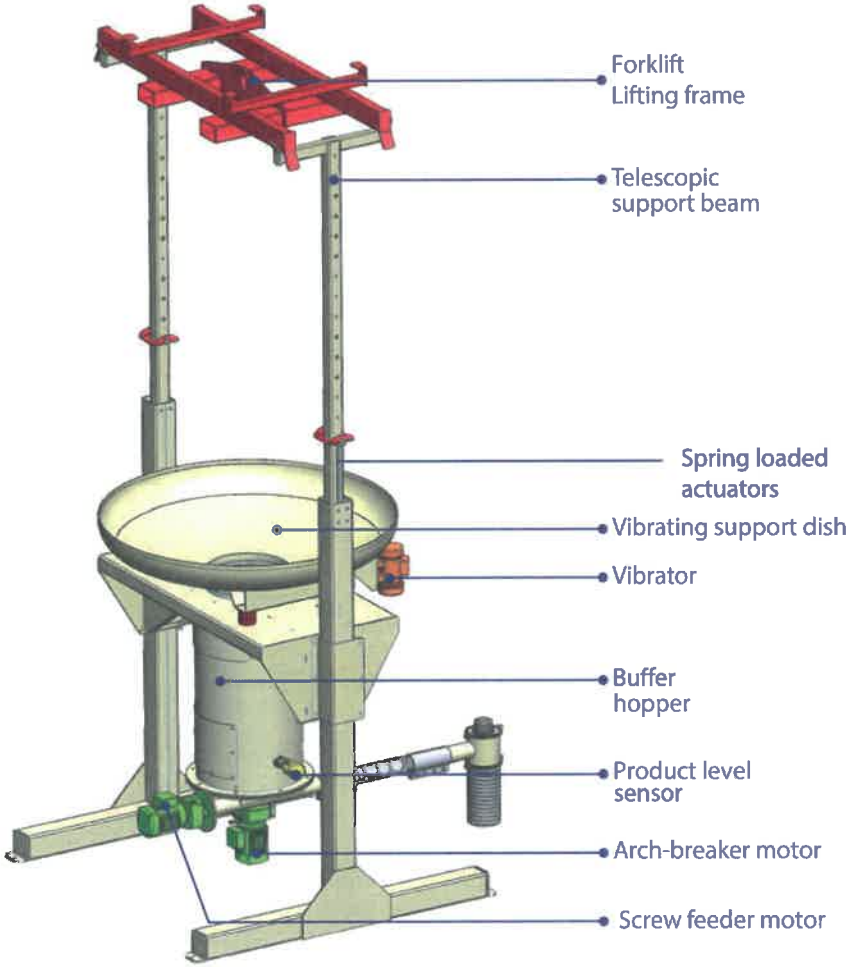

Advantages:

- Compact unit
- Suitable for bulk bags up to 2 tons
- Easy assembly
- Easy-to-use
- Rental units available
- Complete emptying of bulk bag
- Optimized dust control
- Self-loading version available with integrated hoist

Seld-loading version :

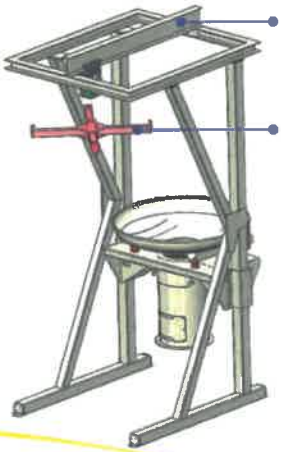

Installation Example:

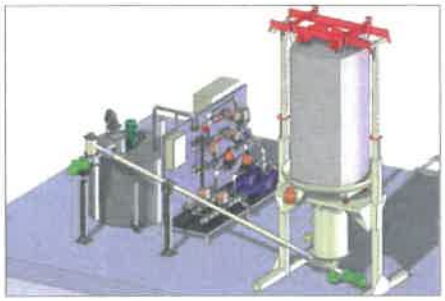

www.sodimate-inc.com

Sodimate

Powder handling expert

Wastewater Treatment | Water Treatment | Flue Gas Treatment

Operation:

The big bag is supported by two telescopic, spring-loaded arms and loaded on a vibrating dish that only vibrates when the sensor detects a lack of product in the hopper.

This sequence ensures the complete emptying of the bag and signals the operator when it is time to replace it.

The unit also comes equipped with Sodimate's mechanical arch-breaker and volumetric screw feeder. The screw feeder can be flexible or connected to an inclined conveyor to transfer the product vertically to the discharge point.

Products
Quicklime
Hydrated Lime
Powdered Activated Carbon (PAC)
Sodium Bicarbonate
Microsand
Soda Ash
Polymers
Plastic Pellets

Specifications:

- **Fabrication material: carbon steel, stainless steel 304/316**
- **Single or multiple screw feeders**
- **Big bags up to 2 tons**

Options :

- **Isolation diaphragm valve**
- **Dust collector**
- **Big Bag opening knife**
- **Load cells (gravimetric)**
- **Electrical hoist and trolley**
- **Explosion proof unit**

Screw Feeder type	Feedrate*
1½ "	1 ¾ ft^3/hr max.
2 "	15 ft^3/hr max.
3 "	50 ft^3/hr max.
3 ¼"	80 ft^3/hr max.
4 "	130 ft^3/hr max.
5 "	450 ft^3/hr max.

* feedrate may vary according to product and density

2950 W. Chicago Ave., Ste 205, Chicago IL 60622
Tel: 773-665-8800 Fax: 773-665-8805
www.sodimate-inc.com

GAC Vessels

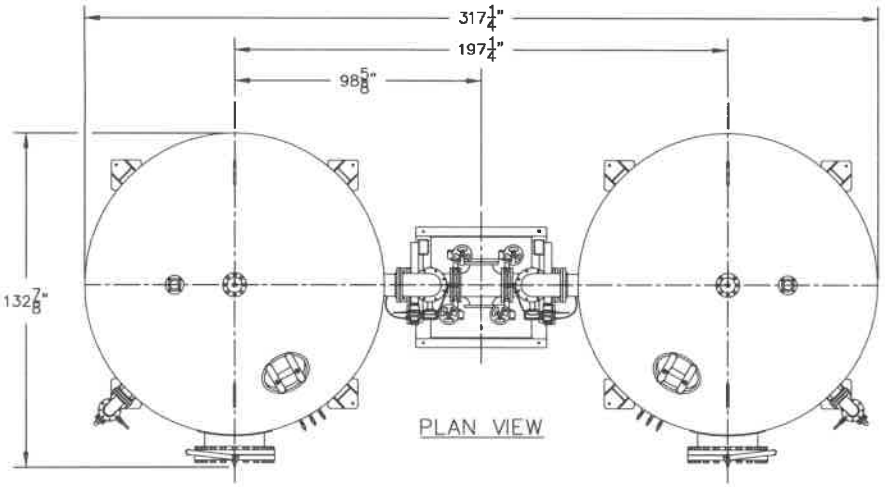

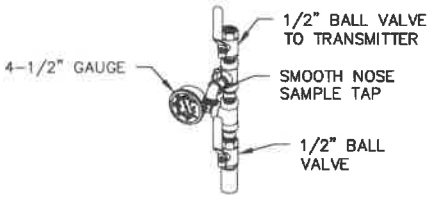

DETAIL "A"

1/2" PRESSURE/SAMPLE TAP
SCALE: 1"=1' QTY (4)

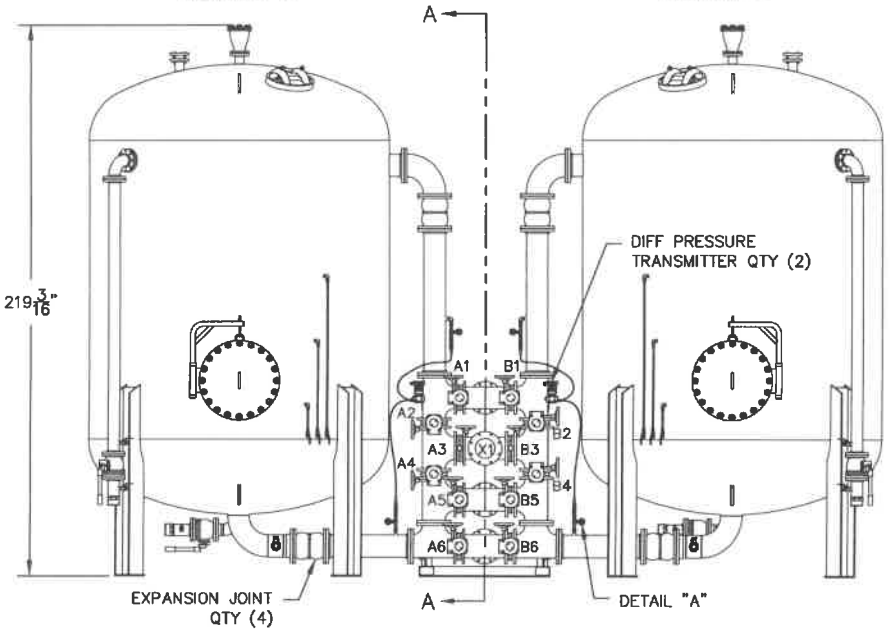

FRONT ELEVATION

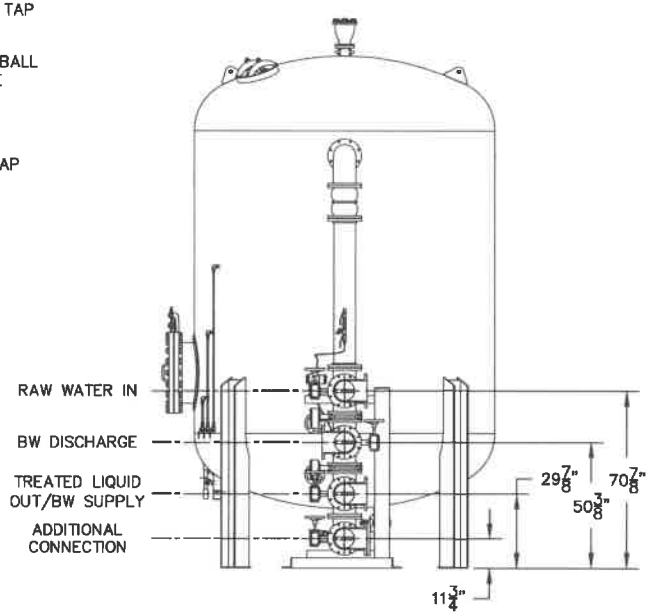

SECTION A–A

VALVE OPERATION MODE

MODE OF OPERATION	A1	A2	A3	A4	A5	A6	B1	B2	B3	B4	B5	B6	X1
UNIT A (ONLY) OPERATION	OPEN	CLOSED	CLOSED	CLOSED	OPEN	CLOSED	CLOSED	CLOSED	CLOSED	CLOSED	CLOSED	CLOSED	CLOSED
UNIT B (ONLY) OPERATION	CLOSED	CLOSED	CLOSED	CLOSED	CLOSED	CLOSED	OPEN	CLOSED	CLOSED	CLOSED	OPEN	CLOSED	CLOSED
SERIES FLOW OPERATION UNIT A TO UNIT B	OPEN	CLOSED	OPEN	OPEN	CLOSED	CLOSED	CLOSED	OPEN	OPEN	CLOSED	OPEN	CLOSED	CLOSED
SERIES FLOW OPERATION UNIT B TO UNIT A	CLOSED	OPEN	OPEN	CLOSED	OPEN	CLOSED	OPEN	CLOSED	OPEN	OPEN	CLOSED	CLOSED	CLOSED
PARALLEL FLOW OPERATION UNIT A & B	OPEN	CLOSED	CLOSED	CLOSED	OPEN	CLOSED	OPEN	CLOSED	CLOSED	CLOSED	OPEN	CLOSED	CLOSED
UNIT A ONLY BACKWASH	CLOSED	OPEN	OPEN	CLOSED	OPEN	CLOSED	CLOSED	CLOSED	CLOSED	CLOSED	CLOSED	CLOSED	OPEN
UNIT B ONLY BACKWASH	CLOSED	CLOSED	CLOSED	CLOSED	CLOSED	CLOSED	CLOSED	OPEN	OPEN	CLOSED	OPEN	CLOSED	OPEN
UNIT A FILTER TO WASTE	OPEN	CLOSED	OPEN	OPEN	CLOSED	CLOSED	CLOSED	CLOSED	CLOSED	CLOSED	CLOSED	CLOSED	OPEN
UNIT B FILTER TO WASTE	CLOSED	CLOSED	CLOSED	CLOSED	CLOSED	CLOSED	OPEN	CLOSED	OPEN	OPEN	CLOSED	CLOSED	OPEN

NOTES
1. ALL FLANGE PATTERNS STRADDLE PLANT NORTH CENTERLINE
2. ALL SYSTEM PROCESS VALVES TO BE BRAY SERIES 30, CAST IRON w/ HAND WHEEL OPERATOR
3. DIFFERENTIAL PRESSURE TRANSMITTERS TO BE SIEMENS SISTRANS P DS III MOUNTED ON A 3-WAY VALVE MANIFOLD
4. ALL ELEVATIONS MARKED FROM TOP OF FOUNDATION PAD
5. VALVE X1 INSTALLED ON SITE

tetraSOLV FILTRATION
1424 ABRAHAM DRIVE
ANDERSON, INDIANA 46013
Ph (765) 643-3941
Fax (765) 643-3949

ALL INFORMATION CONTAINED IN THIS DOCUMENT IS PROPERTY OF TETRASOLV FILTRATION AND MAY NOT BE REPRODUCED WITHOUT PERMISSION

REV NO	REVISION NOTE	DATE	SIGNATURE
1	MOD BW ORIENTATION, COMBINED TREATED OUT/BW SUPPLY, SHELL NT	11/12/19	SDB
2			
3			
4			
5			

CUSTOMER BARNSTABLE	JOB # TBD	DATE 10/21/2019	SCALE 1/4"=1'
DESIGNED BY S.BLITCHINGTON	SYSTEM_ASSEMBLY		
APPROVED BY –	QUANTITY 4	UNITS IPS	DRAWING # D-3.R-1

IX Resin Containers for Rental

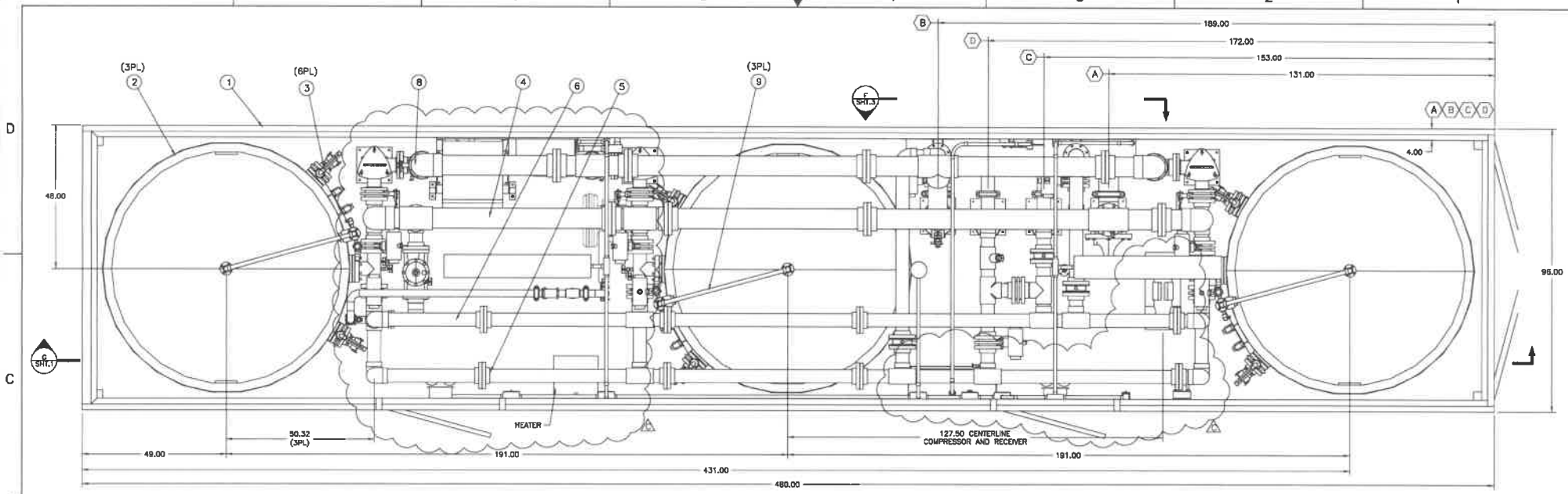

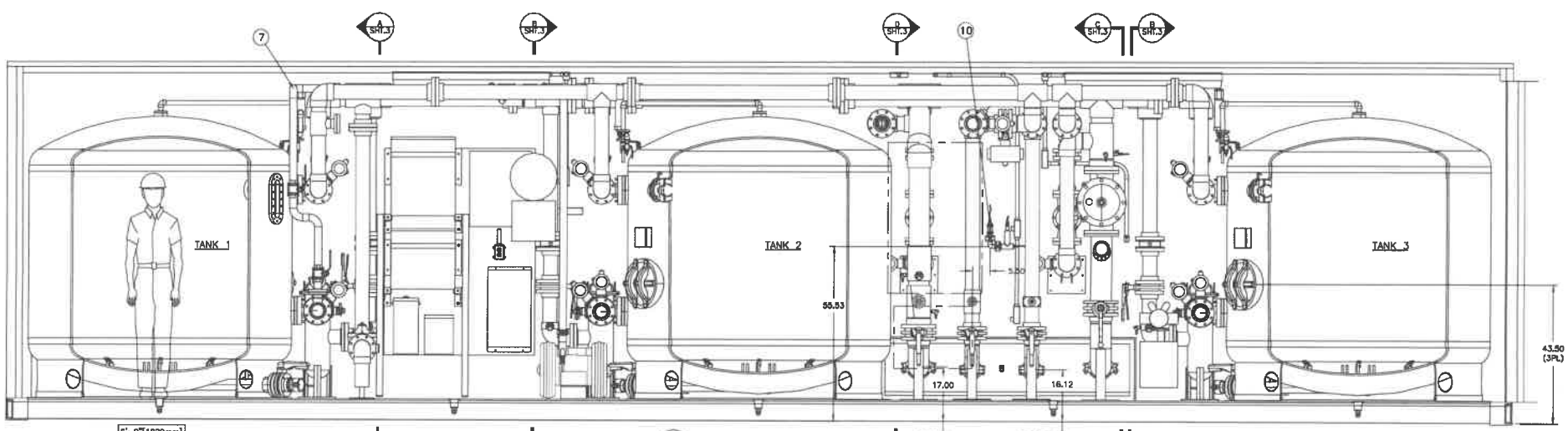

SECTION G–G
SCALE: NONE

REV	DESCRIPTION	ECO	DWN	APVD	DATE	CHKD
C	REVISED AS NOTED	–	SJ	HG	02AUG12	KW
B	REVISED AS NOTED	–	SJS	HG	09JUL12	JC
A	INITIAL RELEASE	–	BN	HG	11MAY12	JC

TOLERANCES UNLESS NOTED
DECIMALS: .X ± ; .XX ± 0.50 ; .XXX ± — ANGLES ± 0.5 ; FRAC ± 1/8"
DIMENSIONS IN INCHES DO NOT SCALE — THIRD ANGLE

		DATE
DRAWN BY	BN	03APR12
CHECKED BY	JC	18MAY12
APPROVED BY	KW	11MAY12
APPROVED BY	HG	11MAY12

GE Water & Process Technologies
GLOBAL HEADQUARTERS : TREVOSE, PA USA +1-215-355-3300 WWW.GEWATER.COM

THIS DRAWING, THE DESIGN AND THE PROCESS IT CONVEYS, IS THE PROPERTY OF GENERAL ELECTRIC COMPANY AND ITS AFFILIATES AND THE INFORMATION CONTAINED HEREIN IS PROPRIETARY INFORMATION WHICH IS NOT TO BE DISCLOSED TO ANYONE WITHOUT PRIOR WRITTEN CONSENT OF SAID COMPANY. THIS DRAWING IS TO BE USED EXCLUSIVELY FOR THE PURPOSES EXPRESSLY AUTHORIZED BY GENERAL ELECTRIC COMPANY AND ITS AFFILIATES. SUBSIDIARIES, OFFICERS AND QUALIFIED REPRESENTATIVES AND FOR NO OTHER PURPOSE. NEITHER THIS DRAWING, NOR ANY PORTION THEREOF, SHALL BE REPRODUCED WITHOUT THE PRIOR WRITTEN CONSENT OF SAID COMPANY, AND ANY SUCH REPRODUCTION SHALL BEAR THIS NOTICE.

CLIENT/JOB: GE MOBILE WATER AUTOFILTER 3X7

FILE: AUTOCAD

TITLE: GENERAL ARRANGEMENT SYS,PRETREATMENT,BWRO,CE

MATERIAL: 500208A–PG–02

SIZE	DRAWING NO.	REV
D	500208A–PG–02	C
PROJECT	500208	
SCALE 1:16	SHEET 1 OF 3	

P/N 0101082–RNP01

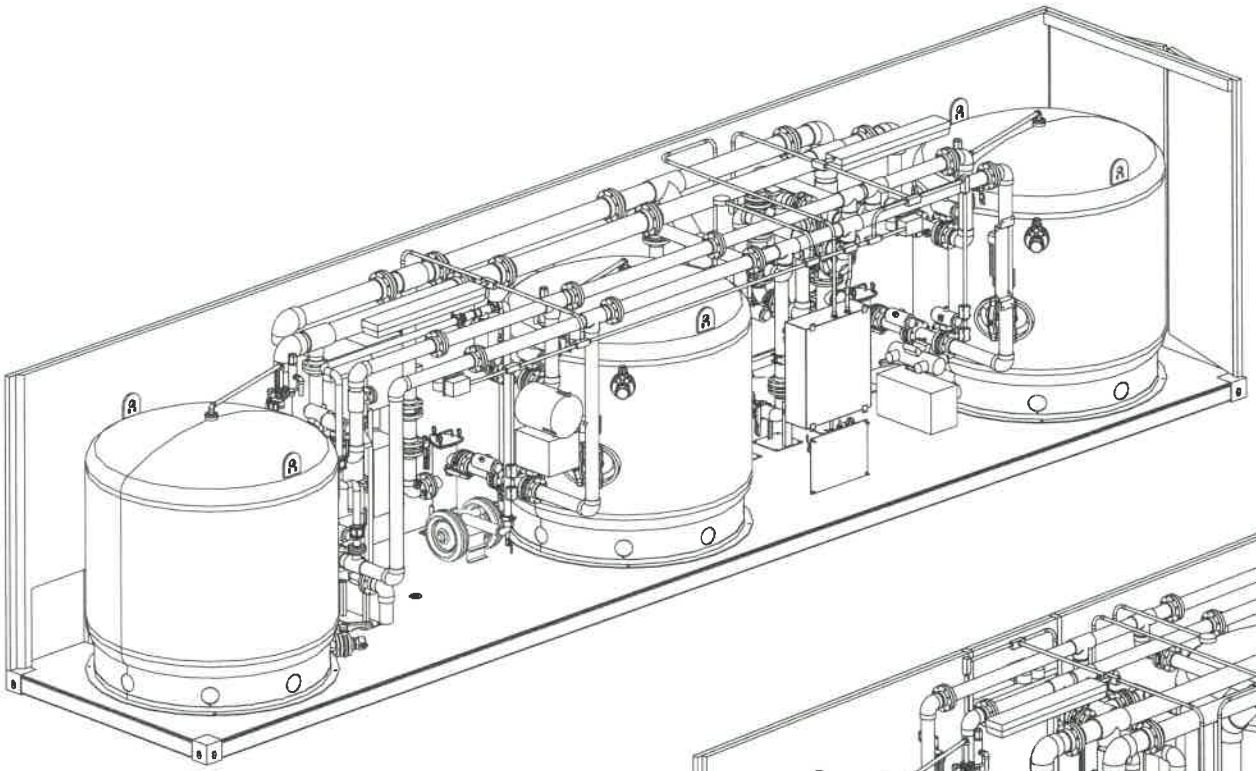

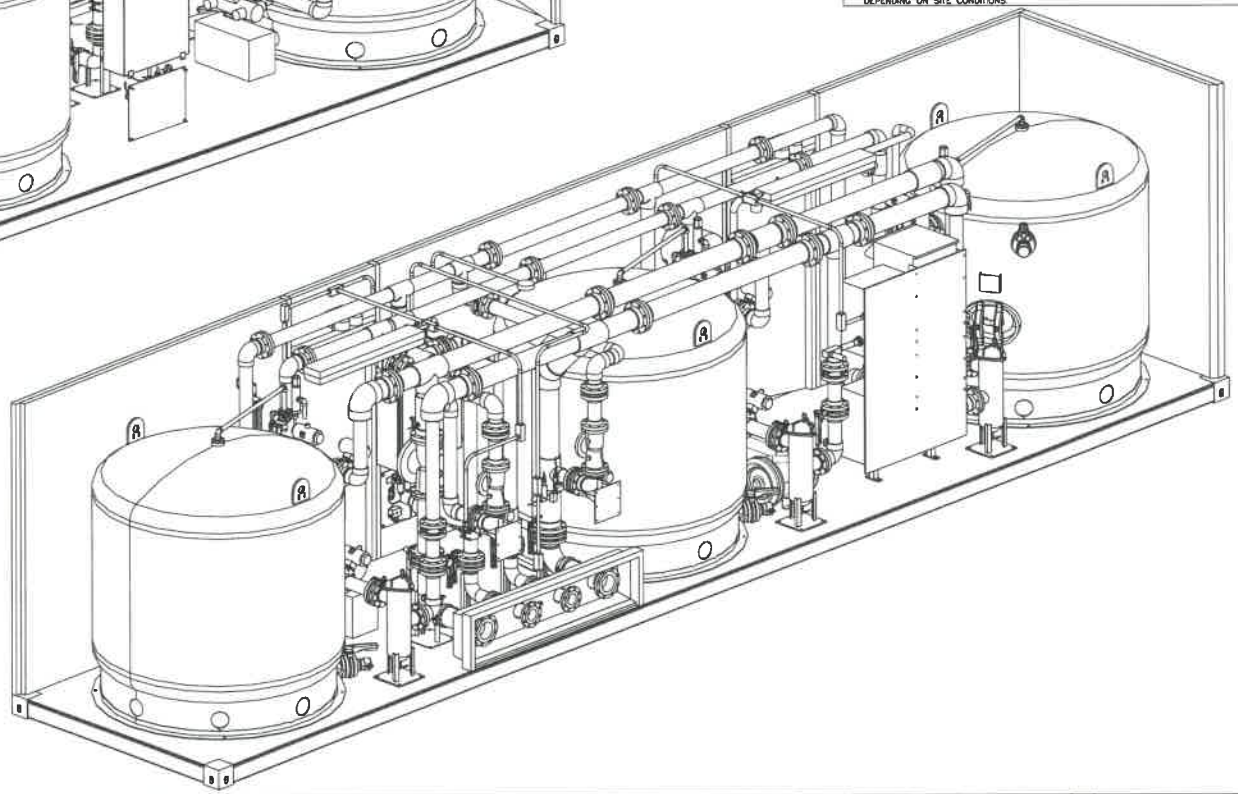

NOTES:

1. CONNECTION TABLE

ITEM	DESCRIPTION	MATERIAL	TYPE	SIZE
A	FEED INLET	SS316L	150# FLANGE	6.00
B	PRODUCT OUTLET	SS316L	150# FLANGE	6.00
C	BRINE INLET	SS316L	150# FLANGE	4.00
D	WASTE OUTLET	SS316L	150# FLANGE	4.00
E	INSTRUMENT AIR INLET	316	FPT	0.5

2. SHIPPING WEIGHT – 30,000 LBS (13,608 KG).
   SHIPPING WEIGHT WITH MEDIA – 60,000 LBS (27,211 KG).
3. OPERATING WEIGHT – 95,000 LBS (43,100 KG).
4. QUANTITY REQUIRED: 1 ASSEMBLY AS SHOWN.
5. PLUMBING RUN \ EQUIPMENT TABLE:

FIND NO.	PART NUMBER	QTY.	DESCRIPTION	U/M
1	3030555	1	CONTAINER,40',BWRO,PT	EA
2	3031213	3	VESSEL,MMF,84x53.5,CS,BM,SUBC,PAINT	EA
3	500203A–PP–03	6	PLMB,PVC,3.0",MEDIA OUTLET	EA
4	500208A–PP–01	1	PLMB,PVC,6.0",FEED	EA
5	500208A–PP–02	1	PLMB,CPVC,4.0",BACKWASH OUT	EA
6	500208A–PP–03	1	PLMB,PVC,4.0",BRINE IN	EA
7	500208A–PP–04	1	PLMB,316,2.0",AIR BLOWER	EA
8	500208A–PP–05	1	PLMB,PVC,6.0",PRODUCT	EA
9	500208A–PP–06	3	PLMB,316,1.0",VENT	EA
10	500208A–PP–07	1	ASSEMBLY,PH ANALYZER,M800	EA

6. ALL DIMENSIONS IN INCHES.
7. REFERENCE – PROCESS AND INSTRUMENTATION DIAGRAM : 500208A–AP–01
8. COMPRESSOR (PN:500208A–101) AND HEATER (PN:500208A–201) WILL BE LOCATED DEPENDING ON SITE CONDITIONS

REV	DESCRIPTION	ECO	DWN	APVD	DATE	CHKD
C	REVISED AS NOTED	–	SJ	HG	02AUG12	KW
B	REVISED AS NOTED	–	DJS	HG	09JUL12	JC
A	INITIAL RELEASE	–	BN	HG	11MAY12	JC

TOLERANCES UNLESS NOTED
DECIMALS: .X ± ; .XX ± 0.50 ; .XXX ± ; ANGLES ± 0.5 ; FRAC. ± 1/8"

DIMENSIONS IN INCHES
DO NOT SCALE

THIRD ANGLE

DRAWN BY	BN	DATE 03APR12
CHECKED BY	JC	DATE 16MAY12
APPROVED BY	KW	DATE 11MAY12
APPROVED BY	HG	DATE 11MAY12

GE Water & Process Technologies

THIS DRAWING, THE DESIGN AND THE PATENTS IT CONTAIN, IS THE PROPERTY OF GENERAL ELECTRIC COMPANY AND ITS AFFILIATES AND THE INFORMATION CONTAINED HEREIN IS PROPRIETARY INFORMATION WHICH IS NOT TO BE DISCLOSED TO ANYONE WITHOUT PRIOR WRITTEN CONSENT OF SAID COMPANY. THIS DRAWING IS TO BE USED EXCLUSIVELY FOR THE PURPOSES EXPRESSLY AUTHORIZED BY GENERAL ELECTRIC COMPANY AND ITS AFFILIATES THROUGH ITS OFFICERS AND QUALIFIED REPRESENTATIVES AND FOR NO OTHER PURPOSE. NEITHER THIS DRAWING, NOR ANY PORTION THEREOF, SHALL BE REPRODUCED WITHOUT THE PRIOR WRITTEN CONSENT OF SAID COMPANY, AND ANY SUCH REPRODUCTION SHALL BEAR THIS NOTICE.

CLIENT/JOB: GE MOBILE WATER AUTOFILTER 3X7

TITLE: GENERAL ARRANGEMENT SYS,PRETREATMENT,BWRO,CE

FILE: AUTOCAD

MATERIAL: 500208A–PG–02

SIZE: D

DRAWING NO.: 500208A–PG–02

REV: C

PROJECT: 500208

SCALE: 1:16

SHEET: 2 OF 3

P/N 1161667–00P01

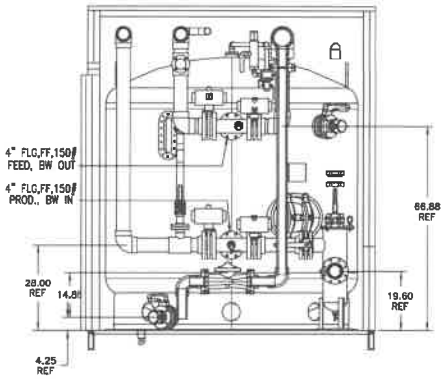

SECTION A–A
SCALE: 1:20

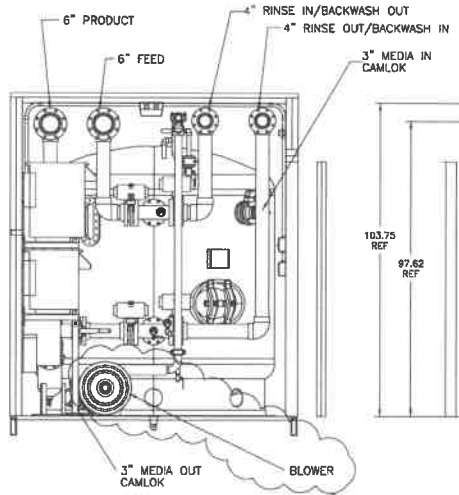

SECTION B–B
SCALE: 1:20

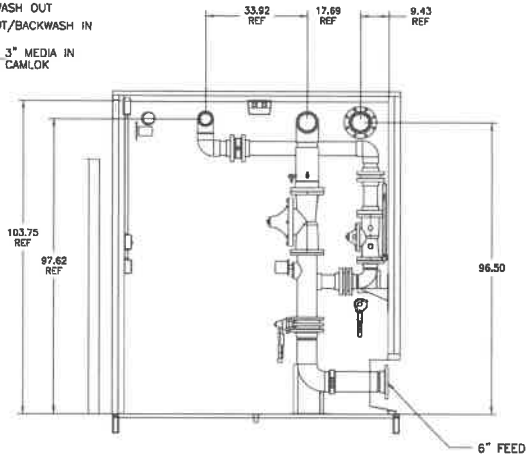

SECTION C–C
SCALE: 1:20

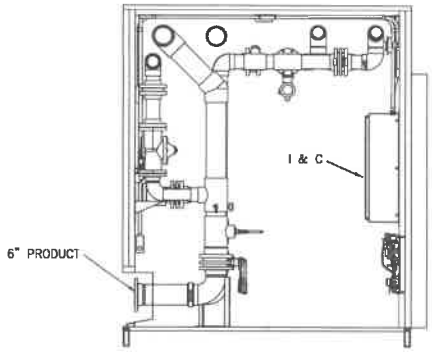

SECTION D–D
SCALE: 1:20

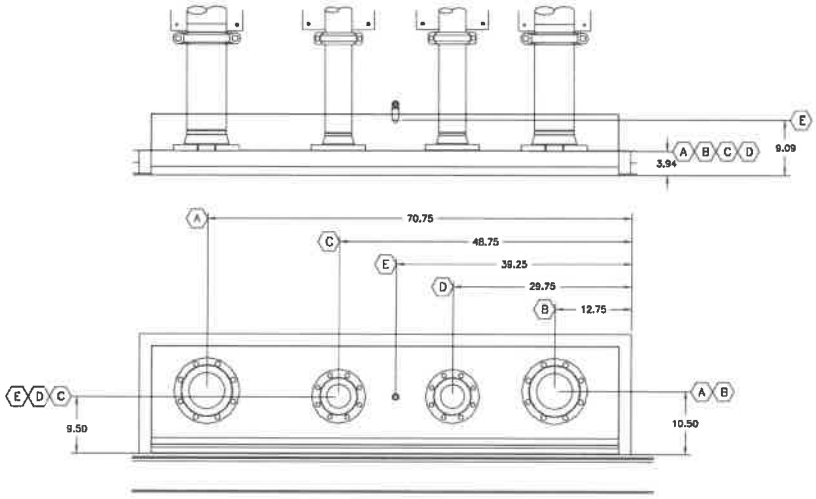

SECTION F–F
SCALE: 1:10

REV	DESCRIPTION	ECO	DWN	APVD	DATE	CHKD
C	REVISED AS NOTED	–	SJ	HG	02AUG12	KW
B	REVISED AS NOTED	–	DJS	HG	09JUL12	JC
A	INITIAL RELEASE	–	BN	HG	11MAY12	JC

TOLERANCES UNLESS NOTED
DECIMALS: X ± ; .XX ± 0.50 ; .XXX ± ; ANGLES ± 0.5 ; FRAC ±1/2"
DIMENSIONS IN INCHES DO NOT SCALE
THIRD ANGLE

DRAWN BY BN	DATE 03APR12	
CHECKED BY JC	DATE 16MAY12	
APPROVED BY KW	DATE 11MAY12	
APPROVED BY HG	DATE 11MAY12	

GE Water & Process Technologies
GLOBAL HEADQUARTERS : TREVOSE, PA USA +1-215-355-3300 www.gewaterprocess.com

THIS DRAWING, THE DESIGN AND THE PRODUCT IT DEPICTS IS THE PROPERTY OF GENERAL ELECTRIC COMPANY AND ITS AFFILIATES AND THE INFORMATION CONTAINED HEREIN IS PROPRIETARY INFORMATION WHICH IS NOT TO BE DISCLOSED TO ANYONE WITHOUT PRIOR WRITTEN CONSENT OF SAID COMPANY. THIS DRAWING IS TO BE USED EXCLUSIVELY FOR THE PURPOSES EXPRESSLY AUTHORIZED BY GENERAL ELECTRIC COMPANY AND ITS AFFILIATES THROUGH ITS OFFICERS AND QUALIFIED REPRESENTATIVES AND FOR NO OTHER PURPOSE. NEITHER THIS DRAWING NOR ANY PORTION THEREOF, SHALL BE REPRODUCED WITHOUT THE PRIOR WRITTEN CONSENT OF SAID COMPANY, AND ANY SUCH REPRODUCTION SHALL BEAR THIS NOTICE.

CLIENT/JOB: GE MOBILE WATER AUTOFILTER 3X7

TITLE: GENERAL ARRANGEMENT SYS,PRETREATMENT,BWRO,CE

FILE: AUTOCAD

MATERIAL: 500208A–PG–02

SIZE	DRAWING NO.	REV
D	500208A–PG–02	C
PROJECT	500208	
SCALE: AS NOTED	SHEET 3 OF 3	

P/N 1101502-000001

#20-033

20 033
Back Page

#20-035

Office of the Mayor

One JFK Memorial Drive
Braintree, Massachusetts 02184

Charles C. Kokoros
Mayor

781-794-8100

MEMORANDUM

To: Shannon Hume, President of the Council
Susan Cimino, Clerk of the Council
James Casey, Town Clerk

From: Charles C. Kokoros, Mayor CCK

Cc: Nicole I. Taub, Interim Chief of Staff and Director of Operations
Edward Spellman, Director of Municipal Finance
Robert Brinkmann, Deputy Assessor

RECEIVED TOWN CLERK
BRAINTREE, MA
2020 MAR 11 AM 11:11

Date: March 10, 2020

Re: Motion to Accept Massachusetts General Law c. 59 s. 5C ½ (additional real estate exemption)

President Hume, Clerk Casey and Clerk Cimino,

As discussed at a previous Town Council meeting, residents are currently eligible for statutory exemptions relative to their real estate tax obligations. In an effort to provide additional relief to these residents, I am proposing that the Town accept M.G.L. c. 59 s. 5C ½ and increase each exemption by 20%.

Local adoption of this provision would allow the Town to increase exemptions for our seniors, surviving spouses, veterans and blind persons by a uniform percentage for each exemption with certain restrictions. For example, the increase must be approved by the Council prior to July 1 and explicitly state the fiscal year the exemption percentage increase will first apply. The vote cannot be revoked for 3 years after acceptance. Also, taxpayers cannot pay less than they did the net real estate tax than the prior fiscal year and the taxable value cannot be less than 10% of its full and fair cash value after the exemptions. Finally, the additional exemption values are charged to the overlay account and are not eligible for reimbursement by the state. The FY20 balance of the fund is $1,201,000 and the account has a 5 year average balance of $1,123,600.

The following is a chart detailing the current exemption limits and the proposed increase valued at 20%:

Clause (MGL)	Description	FY19/FY20 Exemption Maximum	FY21 Proposed Exemption Maximum
17/17D	Senior (no income limit)	$175.00	$210.00
22	Veteran (10% plus)	$400.00	$480.00
22A	Veteran (loss of limb/eye)	$750.00	$900.00
22C	Veteran (100% plus housing adapt)	$1,500.00	$1,800.00
22E	Veteran (100%)	$1,000.00	$1,200.00
37A	Blind	$500.00	$600.00
41C	Senior (income limits)	$1,000.00	$1,200.00

Also, for your reference, I am attaching a list of exemptions currently available with the current exemption maximum and statutory restrictions (i.e. income and savings limits).

In addition to the exemptions detailed above, eligible seniors will maintain a deferral option under Clause 41A (Eligibility requirements include 65 or older and a maximum income of $40,000 (married or single)). Those currently receiving a 41A deferral benefit would not see an increase in their taxes and instead the additional costs would be deferred along with the existing tax obligations. The total amount of taxes become due upon death or sale and the deferral program provides a reduced interest rate when payment becomes due.
The Town will also continue to offer a Senior Citizen Municipal Service Program to assist homeowners over the age of 60 with real estate tax obligations while allowing the senior to contribute knowledge and experience to the various departments within the Town. Work hours are calculated at the minimum wage rate and accrued to equal the maximum abatement amount of $750. This credit is then applied to the resident's tax bill.

Accordingly, your review and approval of the following motion is requested:

Motion

MOTION: That the Town accept Massachusetts General Laws Chapter 59, Section 5C ½, which provides for an additional real estate exemption for taxpayers who are granted personal exemptions on their domiciles under Massachusetts General Laws Chapter 59, Section 5, including certain blind persons, veterans, surviving spouses and seniors, and provide an additional exemption up to twenty percent (20%) of the personal exemption, to be effective for exemptions granted for any fiscal year beginning on or after July 1, 2020.

EXEMPTION TYPES AND QUALIFICATIONS

CLAUSE 41C *(SENIOR OVER 65)*	$1,000.00	STATUS	MAXIMUM INCOME*	MAXIMUM SAVINGS(or less)*
		Married:	$34,392.77	$62,866.31
		Single:	$22,927.48	$45,721.33

CLAUSE 17 *(SENIOR OVER 65)*	$175.00	STATUS	MAXIMUM INCOME*	MAXIMUM SAVINGS(or less)*
		Married:	N/A	$47,791.72
		Single:	N/A	$47,791.72

CLAUSE 17D *(WIDOW/WIDOWER)*	$175.00		MAXIMUM INCOME	MAXIMUM SAVINGS(or less)*
		Single:	N/A	$47,791.72

***SEE BELOW FOR WHAT QUALIFIES FOR SAVINGS AND INCOME**

CLAUSE 37A ***(BLIND)***	**$500.00**	***Date of Determination must be before July 1st of Fiscal Year.** **Please provide Certificate of Blindness with registration date**
CLAUSE 22/22E ***(VETERANS)***	**$400.00 or $1,000.00**	***Amount varies according to % of Disability (minimum 10%)** ***Date of Determination must be before July 1st of current Fiscal Year.**

***SAVINGS INCLUDE:**
IRA'S, CD'S, 401K'S
BANK ACCOUNTS

FOR INCOME PLEASE SUBMIT COPIES OF:
MOST RECENT 1040 TAX FORM
SOCIAL SECURITY STATEMENTS
CURRENT BANK STATEMENT
PENSION/RETIREMENT STATEMENT
INCOME FROM REVERSE MORTGAGE

20 037

BRAINTREE HIGH SCHOOL MSBA Statement of Interest

Braintree Town Council MSBA Required Vote Language

March 17, 2020

Resolved: Having convened in an open meeting on March 17, 2020 prior to the SOI submission closing date, the Town Council of Braintree, in accordance with its charter, by-laws, and ordinances, has voted to authorize the Superintendent to submit to the Massachusetts School Building Authority the Statement of Interest Form dated March 17, 2020 for Braintree High School located at 128 Town Street, Braintree, Massachusetts, which describes and explains the following deficiencies and the priority category(s) for which an application may be submitted to the Massachusetts School Building Authority in the future: Priority #3: Prevention of the loss of accreditation; Priority #5: Replacement, renovation, or modernization of school facility systems, such as roofs, windows, boilers, heating and ventilation systems, to increase energy conservation and decrease energy related costs in a school facility; Priority #7: Replacement of or addition to obsolete buildings in order to provide for a full range of programs consistent with state and approved local requirements; and hereby further specifically acknowledges that by submitting this Statement of Interest Form, the Massachusetts School Building Authority in no way guarantees the acceptance or the approval of an application, the awarding of a grant or any other funding commitment from the Massachusetts School Building Authority, or commits the Town of Braintree or the Braintree School Department to filing an application for funding with the Massachusetts School Building Authority.

Massachusetts School Building Authority

Next Steps to Finalize Submission of your FY 2020 Statement of Interest

Thank you for submitting your FY 2020 Statement of Interest (SOI) to the MSBA electronically. **Please note, the District's submission is not yet complete**. The District is required to mail all required supporting documentation, which is described below.

VOTES: Each SOI must be submitted with the proper vote documentation. This means that (1) the required governing bodies have voted to submit each SOI, (2) the specific vote language required by the MSBA has been used, and (3) the District has submitted a record of the vote in the format required by the MSBA.

- **School Committee Vote:** Submittal of all SOIs must be approved by a vote of the School Committee.
  - For documentation of the vote of the School Committee, Minutes of the School Committee meeting at which the vote was taken must be submitted with the original signature of the Committee Chairperson. The Minutes must contain the actual text of the vote taken which should be substantially the same as the MSBA's SOI vote language.
- **Municipal Body Vote:** SOIs that are submitted by cities and towns must be approved by a vote of the appropriate municipal body (e.g., City Council/ Aldermen/Board of Selectmen) in addition to a vote of the School Committee.
  - Regional School Districts do not need to submit a vote of the municipal body.
  - For the vote of the municipal governing body, a copy of the text of the vote, which shall be substantially the same as the MSBA's SOI vote language, must be submitted with a certification of the City/Town Clerk that the vote was taken and duly recorded, and the date of the vote must be provided.

ADDITIONAL DOCUMENTATION FOR SOI PRIORITIES #1 AND #3: If a District selects Priority #1 and/or Priority #3, the District is required to submit additional documentation with its SOI.

- If a District selects Priority #1, Replacement or renovation of a building which is structurally unsound or otherwise in a condition seriously jeopardizing the health and safety of the school children, where no alternative exists, the MSBA requires a hard copy of the engineering or other report detailing the nature and severity of the problem and a written professional opinion of how imminent the system failure is likely to manifest itself. The District also must submit photographs of the problematic building area or system to the MSBA.
- If a District selects Priority #3, Prevention of a loss of accreditation, the SOI will not be considered complete unless and until a summary of the accreditation report focused on the deficiency as stated in this SOI is provided.

ADDITIONAL INFORMATION: In addition to the information required above, the District may also provide any reports, pictures, or other information they feel will give the MSBA a better understanding of the issues identified at a facility.

If you have any questions about the SOI process please contact the MSBA at 617-720-4466 or SOI@massschoolbuildings.org.

Massachusetts School Building Authority

School District Braintree

District Contact Frank Hackett TEL: (781) 380-0130

Name of School Braintree High

Submission Date 3/2/2020

SOI CERTIFICATION

To be eligible to submit a Statement of Interest (SOI), a district must certify the following:

- [x] The district hereby acknowledges and agrees that this SOI is NOT an application for funding and that submission of this SOI in no way commits the MSBA to accept an application, approve an application, provide a grant or any other type of funding, or places any other obligation on the MSBA.
- [x] The district hereby acknowledges that no district shall have any entitlement to funds from the MSBA, pursuant to M.G.L. c. 70B or the provisions of 963 CMR 2.00.
- [x] The district hereby acknowledges that the provisions of 963 CMR 2.00 shall apply to the district and all projects for which the district is seeking and/or receiving funds for any portion of a municipally-owned or regionally-owned school facility from the MSBA pursuant to M.G.L. c. 70B.
- [x] The district hereby acknowledges that this SOI is for one existing municipally-owned or regionally-owned public school facility in the district that is currently used or will be used to educate public PreK-12 students and that the facility for which the SOI is being submitted does not serve a solely early childhood or Pre-K student population.
- [x] After the district completes and submits this SOI electronically, the district must mail hard copies of the required documentation described under the "Vote" tab, on or before the deadline.
- [x] The district will schedule and hold a meeting at which the School Committee will vote, using the specific language contained in the "Vote" tab, to authorize the submission of this SOI. This is required for cities, towns, and regional school districts.
- [x] Prior to the submission of the SOI, the district will schedule and hold a meeting at which the City Council/Board of Aldermen or Board of Selectmen/equivalent governing body will vote, using the specific language contained in the "Vote" tab, to authorize the submission of this SOI. This is not required for regional school districts.
- [x] On or before the SOI deadline, the district will submit the minutes of the meeting at which the School Committee votes to authorize the Superintendent to submit this SOI. The District will use the MSBA's vote template and the vote will specifically reference the school and the priorities for which the SOI is being submitted. The minutes will be signed by the School Committee Chair. This is required for cities, towns, and regional school districts.
- [x] The district has arranged with the City/Town Clerk to certify the vote of the City Council/Board of Aldermen or Board of Selectmen/equivalent governing body to authorize the Superintendent to submit this SOI. The district will use the MSBA's vote template and submit the full text of this vote, which will specifically reference the school and the priorities for which the SOI is being submitted, to the MSBA on or before the SOI deadline. This is not required for regional school districts.
- [x] The district hereby acknowledges that this SOI submission will not be complete until the MSBA has received all of the required vote documentation in a format acceptable to the MSBA. If Priority 1 is selected, your SOI will not be considered complete unless and until you provide the required engineering (or other) report, a professional opinion regarding the problem, and photographs of the problematic area or system. If Priority 3 is selected, your SOI will not be considered complete unless and until you provide a summary of the accreditation report focused on the deficiency as stated in this SOI.

LOCAL CHIEF EXECUTIVE OFFICER/DISTRICT SUPERINTENDENT/SCHOOL COMMITTEE CHAIR (E.g., Mayor, Town Manager, Board of Selectmen)

Chief Executive Officer *	**School Committee Chair**	**Superintendent of Schools**
(signature)	(signature)	(signature)
Date	Date	Date

* Local chief executive officer: In a city or town with a manager form of government, the manager of the municipality; in other cities, the mayor; and in other towns, the board of selectmen unless, in a city or town, some other municipal office is designated to the chief executive office under the provisions of a local charter. Please note, in districts where the Superintendent is also the Local Chief Executive Officer, it is required for the same person to sign the Statement of Interest Certifications twice.

Massachusetts School Building Authority

School District Braintree

District Contact Frank Hackett TEL: (781) 380-0130

Name of School Braintree High

Submission Date 3/2/2020

Note

The following Priorities have been included in the Statement of Interest:

1. ☐ Replacement or renovation of a building which is structurally unsound or otherwise in a condition seriously jeopardizing the health and safety of school children, where no alternative exists.
2. ☐ Elimination of existing severe overcrowding.
3. ☑ Prevention of the loss of accreditation.
4. ☐ Prevention of severe overcrowding expected to result from increased enrollments.
5. ☑ Replacement, renovation or modernization of school facility systems, such as roofs, windows, boilers, heating and ventilation systems, to increase energy conservation and decrease energy related costs in a school facility.
6. ☐ Short term enrollment growth.
7. ☑ Replacement of or addition to obsolete buildings in order to provide for a full range of programs consistent with state and approved local requirements.
8. ☐ Transition from court-ordered and approved racial balance school districts to walk-to, so-called, or other school districts.

SOI Vote Requirement

☑ I acknowledge that I have reviewed the MSBA's vote requirements for submitting an SOI which are set forth in the Vote Tab of this SOI. I understand that the MSBA requires votes from specific parties/governing bodies, in a specific format using the language provided by the MSBA. Further, I understand that the MSBA requires certified and signed vote documentation to be submitted with the SOI. I acknowledge that my SOI will not be considered complete and, therefore, will not be reviewed by the MSBA unless the required accompanying vote documentation is submitted to the satisfaction of the MSBA.

SOI Program: Core
Potential Project Scope: Renovation\ Addition
Is this a Potential Consolidation? No

Is this SOI the District Priority SOI? No
School name of the District Priority SOI: South Middle School

Is this part of a larger facilities plan? Yes
If "YES", please provide the following:
Facilities Plan Date: 5/14/2014
Planning Firm: Habeeb & Associates

Please provide a brief summary of the plan including its goals and how the school facility that is the subject of this SOI fits into that plan:

The Town of Braintree commissioned Habeeb & Associates in 2014 to provide a comprehensive study of our schools, focusing primarily on our 6 elementary schools, which are experiencing significant space constraints due to increasing enrollments and the expansion of specialized in-district programs. The study considered elementary facility renovations and additions to accommodate existing and projected enrollment growth. Recommendations from the study were built around the core value of maintaining neighborhood elementary schools, as well as keeping the existing structure of two middle schools and Braintree High School (BHS) in place. The Habeeb study brought forward earlier planning considerations that had been explored by the Town, with their final report detailing five main options, each with multiple subsets that allowed for a range of combinations involving renovations and various additions to the existing elementary schools. In general, the report was not well received by the school-community. While Habeeb determined that some of the option subsets failed to provide long-range solutions, several were deemed to meet the demands of current and projected enrollment (building additions), as well as renovations significant enough to upgrade and modernize existing facilities for future use. One option recommended the construction of 4 new K-5 elementary schools that would allow for the closure of all 6 existing facilities. After conducting an extensive review of the Habeeb study and enrollment projections in 2015, the BPS began to explore the feasibility of moving from the existing model of 2 middle schools that serve grades 6-8 to a configuration of grades 5-8 at both schools. This solution, which has been supported by the MSBA at both East Middle School (currently under construction with a targeted Fall 2020 completion) and South Middle School (Detailed Design was submitted in January, 2020), will allow our existing elementary schools to gain over 20 classrooms system-wide that are currently being used by grade 5 students, thus eliminating the need to build additions to those schools. BRAINTREE HIGH SCHOOL: While BHS was not part of the Habeeb 2014 study, it was added to our PreK-12 Master Plan in the winter of 2016 for the reasons detailed in this SOI. Beyond the submission of the SOI, our Master Plan includes a commitment to continue capital improvements at BHS, as evidenced by recent and ongoing upgrades, including a district-wide (all elementary schools & BHS) $10mil ESCO project. This project also included a $200,000/year commitment of annual capital funds from the Town to provide much-needed upgrades that will not generate enough energy savings to fit into the ESCO funding payback model. At BHS, the ESCO investment: (1) replaced 60% of our transformers; (2) provided HVAC system upgrades: (3) installed all new lighting; (4) provided new ceilings in all core areas, and (4) implemented multiple water and other energy conservation measures. The timing of this investment is unfortunate given the submission of this SOI; however, we were not able to wait given the facility needs. BHS was built for a 9-12 high school population of 3,500 students in 1972. As would be expected after 48 years of use, and as described in this SOI, many classrooms are no longer used for the types of courses for which they were designed. None of these facility challenges are surprising considering the age of the building; however, the funds required to conduct the type of full-scale renovations needed to both update existing systems and infrastructure, as well as create spaces that promote 21st century teaching and learning, are beyond the capacity of year-to-year operational budgets and available local capital funds. For these reasons, the most critical action step for BHS within the BPS Master Facilities Plan is the submission of this SOI to the MSBA.

Please provide the current student to teacher ratios at the school facility that is the subject of this SOI: 15 students per teacher

Please provide the originally planned student to teacher ratios at the school facility that is the subject of this SOI: 15 students per teacher

Does the District have a Master Educational Plan that includes facility goals for this building and all school buildings in District? Yes

If "YES", please provide the author and date of the District's Master Educational Plan.

The BPS continues to finalize a Master Educational Plan that provides for the reconfiguration of our six (6) elementary schools from grade 1-5/K-5 and one Kindergarten Center (MSKC), to six (6) grade1-4/ K-4 schools, MSKC, two (2) 5-8 middle schools, and BHS (9-12). The plan includes multiple programmatic and instructional

initiatives, and involves several district and school-based groups representing a wide-range of stakeholders. Oversight of the plan rests with our district leadership team.

Is there overcrowding at the school facility? No

If "YES", please describe in detail, including specific examples of the overcrowding.

Has the district had any recent teacher layoffs or reductions? No

If "YES", how many teaching positions were affected? 0
At which schools in the district?
Please describe the types of teacher positions that were eliminated (e.g., art, math, science, physical education, etc.).

Has the district had any recent staff layoffs or reductions? No

If "YES", how many staff positions were affected? 0
At which schools in the district?
Please describe the types of staff positions that were eliminated (e.g., guidance, administrative, maintenance, etc.).

Please provide a description of the program modifications as a consequence of these teacher and/or staff reductions, including the impact on district class sizes and curriculum.

Does not apply.

Please provide a description of the local budget approval process for a potential capital project with theMSBA. Include schedule information (i.e. Town Meeting dates, city council/town council meetings dates, regional school committee meeting dates). Provide, if applicable, the District's most recent budget approval process that resulted in a budget reduction and the impact of the reduction to the school district (staff reductions, discontinued programs, consolidation of facilities).

The school budget has been developed to include forecasting for future years to support the implementation of our Master Plan. The process begins in the fall with individual school and department planning, culminating with the district-wide leadership team that provides several tiers to the School Committee's Finance & Operations Subcommittee. This subcommittee begins making its recommendation to the full School Committee in early March. A public hearing is held late March/early April, with a final recommendation being presented to the Mayor in April. The Mayor then provides his recommendations for all town department budgets to the Town Council in May. The Council may lower the Mayor's recommended budget, but it is not able to increase it. The School Department has been provided multiple, consecutive years of budget increases, and has not experienced staff reductions due to fiscal constraints.

General Description

BRIEF BUILDING HISTORY: Please provide a detailed description of when the original building was built, and the date(s) and project scopes(s) of any additions and renovations (maximum of 5000 characters).

Braintree High School was constructed in 1972 and is a poured cement building. There have been no additions. Structural repairs were made in 1997, new boilers were installed in 1998 and converted to gas in 1999, the auditorium was upgraded in 2009, and the gymnasium was updated in 2015 with new bleachers, painting, and updated equipment. Solar panels were installed on the roof in 2016. BHS is a significant part of a $10mil ESCO project that began in 2018, including (1) replaced 60% of our transformers; (2) provided HVAC system upgrades: (3) installed all new lighting; (4) provided new ceilings in all core areas, and (5) implemented multiple water and other energy conservation measures. Along with several renovations of existing bathrooms, large public restrooms were added during the summer of 2018 to service the gymnasium and cafeteria.

TOTAL BUILDING SQUARE FOOTAGE: Please provide the original building square footage PLUS the square footage of any additions.

380847

SITE DESCRIPTION: Please provide a detailed description of the current site and any known existing conditions that would impact a potential project at the site. Please note whether there are any other buildings, public or private, that share this current site with the school facility. What is the use(s) of this building(s)? (maximum of 5000 characters).

Braintree High School is located on a 46 acre site with no known site limitations. There are no other buildings on the site at this time, but the town has started construction of a rink/pool facility.

ADDRESS OF FACILITY: Please type address, including number, street name and city/town, if available, or describe the location of the site. (Maximum of 300 characters)

128 Town Street
Braintree MA 02184

BUILDING ENVELOPE: Please provide a detailed description of the building envelope, types of construction materials used, and any known problems or existing conditions (maximum of 5000 characters).

Braintree High School is a concrete building constructed in 1972. The windows and doors are original to the building, have little insulating value, and have exceeded their useful life: they are in need of replacement. The roof was replaced in sections between 2004 and 2008, and was deemed to be in good condition prior to the installation of solar panels in 2016. Water penetration is experienced around windows and penthouse enclosures on the roof in wind-driven rain. There are no known structural problems or concerns.

Has there been a Major Repair or Replacement of the EXTERIOR WALLS? YES
Year of Last Major Repair or Replacement:(YYYY) 1998
Description of Last Major Repair or Replacement:
The exterior walls were waterproofed in 1998 and repaired and painted in 2013.

Roof Section A
Is the District seeking replacement of the Roof Section? NO
Area of Section (square feet) 148838
Type of ROOF (e.g., PVC, EPDM, Shingle, Slate, Tar & Gravel, Other (please describe)
EPDM
Age of Section (number of years since the Roof was installed or replaced) 15
Description of repairs, if applicable, in the last three years. Include year of repair:

The roof was redone in small sections between 2004 and 2008. It is considered to be in good overall condition.

Window Section A
Is the District seeking replacement of the Windows Section? YES
Windows in Section (count) 125
Type of WINDOWS (e.g., Single Pane, Double Pane, Other (please describe))
Double pane original to the building
Age of Section (number of years since the Windows were installed or replaced) 48
Description of repairs, if applicable, in the last three years. Include year of repair:
The windows are original to the building and are past useful life.

MECHANICAL and ELECTRICAL SYSTEMS: Please provide a detailed description of the current mechanical and electrical systems and any known problems or existing conditions (maximum of 5000 characters).

Five (5) Aero gas fired hot water boilers were installed in 2009 and are in good condition. There are 2 Patterson Kelly indirect water to water heat exchangers and storage tanks for domestic hot water. The system is original to the building and is in fair condition. A pneumatic control system exists throughout the building and is in poor condition. The piping system is original to the building and is in poor condition. Leaks are common and the system is frequently under repair. The building is equipped with 11 different air conditioning systems for core spaces. Condensers are roof mounted and in fair condition. Classroom unit ventilators use hot water coils and pneumatic controls and are in fair/poor condition: they do not provide cooling and require frequent and constant maintenance. The electrical system is original to the building and does not meet our needs.

Boiler Section 1
Is the District seeking replacement of the Boiler? YES
Is there more than one boiler room in the School? NO
What percentage of the School is heated by the Boiler? 100
Type of heating fuel (e.g., Heating Oil, Natural Gas, Propane, Other)
5 2009 Aero boilers that are natural gas fired.
Age of Boiler (number of years since the Boiler was installed or replaced) 11
Description of repairs, if applicable, in the last three years. Include year of repair:
Winter of 2018 we required an emergency waiver to repair 2 of the boilers that went offline during the January cold snap. The blowers and controllers were replaced.

Has there been a Major Repair or Replacement of the HVAC SYSTEM? YES
Year of Last Major Repair or Replacement:(YYYY) 2015
Description of Last Major Repair or Replacement:
7 of the rooftop air conditioner condenser units were replaced between 1997 and 2015.

Has there been a Major Repair or Replacement of the ELECTRICAL SERVICES AND DISTRIBUTION SYSTEM? NO
Year of Last Major Repair or Replacement:(YYYY) 1972
Description of Last Major Repair or Replacement:
All electric equipment is original to the building with the exception of the replacement of 60% of the transformers, which were upgraded as part of the 2018 ESCO project.

BUILDING INTERIOR: Please provide a detailed description of the current building interior including a description of the flooring systems, finishes, ceilings, lighting, etc. (maximum of 5000 characters).

BHS was built for a 9-12 high school population of 3,500 students in 1972 and the interior is largely in as-built condition. Many classrooms are no longer used for the types of courses for which they were designed. The walls are concrete block and are painted. Tiles are generally original to the building and range from fair to good condition. Various sections of the building have differing color schemes, and rooms colors are inconsistent.

The flooring is original vinyl tile and many areas include tiles that are broken and popping. Years of wax build-up has also discolored much of the flooring tile and several places have broken tiles that are sealed under the wax. There is some ceramic tile in the main lobbies that is often slippery and a hazard during the wet weather. The building has limited areas where carpeting is in use. Carpeting has been replaced in some areas, but much is still original. The media center has carpet that has differing patterns where newer carpet abuts original carpet. An ESCO project that began in the summer of 2018 acccomplished the following: (1) replaced 60% of our transformers; (2) provided HVAC system upgrades: (3) installed all new lighting; (4) provided new ceilings in all core areas, and (5) implemented multiple water and other energy conservation measures.

PROGRAMS and OPERATIONS: Please provide a detailed description of the current grade structure and programs offered and indicate whether there are program components that cannot be offered due to facility constraints, operational constraints, etc. (maximum of 5000 characters).

Braintree High School (BHS) is a 9-12 academic institution that provides a variety of programs and academic opportunities. It also houses our PreK program, which brings total enrollment to approximately 1850 students. High levels of achievement are seen across all subgroups of our student population, which is becoming increasingly diverse. BHS was named by Newsweek Magazine as one of the top 500 high schools in the country, reaching number 15 out of over 200 high schools in the Commonwealth of Massachusetts. BHS graduates are well prepared for the world they enter, with generally 85-90% attending two (2) or four (4) year colleges, and another 2.7% attending other post-secondary schools, 1-4% enlist in the military, and roughly 5-10% join the workforce. The school is organized into three (3) houses, each supported by an administrator. The core curriculum includes offerings in English language arts (ELA), mathematics, social studies, science, and world languages. Among our core offerings are 21 Advanced Placement (AP) courses that are heavily enrolled. Students also take a physical education course each of their four years, and a required health class during their freshmen year. Electives are offered in core curriculum areas, as well as in music, health, and art. BHS supports and encourages students to take responsibility for their own learning. Teachers effectively communicate expectations to students, and support these expectations through after-school assistance, Google Classroom interactive sites, and consistent grading feedback through an online portal. Special education services are provided both in the classroom and in separate settings, and special education teachers work directly with general education teachers to provide coherent and relevant supports. The school offers several programs that service both general and special education students. The Alternative Program serves students who struggle in the mainstream environment, while a Career Exploration program assists more involved students with transitions beyond high school. Our STRIVES program supports students on the Autism Spectrum and Project PROVE educates a student population with more complex cognitive challenges. The Braintree school-community core value that threads throughout all that we do at BHS, and one that has become the hallmark of our programs, is inclusion: our students move throughout BHS as a community of learners. This value, and the programs above, is also reflected by a 5% decline in suspension rates recently cited as an example for other high schools to consider in working with students who present behavioral challenges. Finally, to ensure that all students have opportunities to explore their talents and interests, BHS offers over 40 extra-curricular activities for students and a complete, and highly successful, menu of interscholastic sports offerings. The aged facility challenges our ability to implement 21st century learning standards. Built in 1972, when 49% of students went on to post-secondary institutions (National Center for Education Statistics), the educational mission reflected by the design was dramatically different than what is both expected, and required, of students today. As a result, there are program components that cannot be fully implemented, or implemented with fidelity, particularly related to STEAM curricula (Science, Technology, Engineering, Art, Mathematics). Large vocational spaces that were part of the original building construction in 1972 are obsolete and no longer utilized for educational programming. Science labs are outdated, and while utilized effectively by talented staff, they are in need of significant upgrades. Dedicated, and purposefully designed technology and engineering classrooms are non-existent, forcing programs to be developed in ways that accommodate for space and infrastructure constraints. Visual and performing art rooms are large but outdated, which impacts both the types of programs the school can offer, as well as its ability to reach instructional goals. Finally, the layout of the building, including classroom and core space adjacencies, creates substantial barriers to curriculum and instructional integration.

EDUCATIONAL SPACES: Please provide a detailed description of the Educational Spaces within the facility, a description of the number and sizes (in square feet) of classrooms, a description of science rooms/labs

including ages and most recent updates, a description of the cafeteria, gym and/or auditorium and a description of the media center/library (maximum of 5000 characters).

Braintree High School (BHS) was constructed in 1972 and consists of 131 classrooms of approximately 600-700sf each, far below the MSBA standard. In addition, there is an expansive media center space (10,000sf), an undersized auditorium, a large cafeteria, and multiple physical education and athletic spaces, including a gymnasium. The media center space is inappropriately configured and inefficient for the delivery of effective programming. While large, it was designed for a different era therefore limiting its function as a space that promotes and supports 21st century learning. The auditorium, while undersized, was renovated in 2009 and includes new seating and a sound system. The gymnasium was updated in 2015 with new bleachers, painting, and updated equipment; however, the locker rooms and supporting spaces are largely original to the building and in need of renovation. The cafeteria is approximately 10,000sf, original to the building, and has not received any significant renovation. The kitchen is located one floor down from the cafeteria, with food being transported up to the serving line. There are 17 science rooms in the building, ranging from approximately 1,000 – 1,400 square feet. The science labs are original and need significant renovation. The school also has several large art rooms that include cabinetry and sinks that are antiquated and inadequate. Several rooms originally designed for programs in home economics have been re-purposed, but retain out-of-date storage cabinets, stoves, and sinks. These spaces are in need of updates to ensure that the appropriate resources are available for the courses actually being taught in the rooms.

CAPACITY and UTILIZATION: Please provide the original design capacity and a detailed description of the current capacity and utilization of the school facility. If the school is overcrowded, please describe steps taken by the administration to address capacity issues. Please also describe in detail any spaces that have been converted from their intended use to be used as classroom space (maximum of 5000 characters).

Braintree High School (BHS) was designed for a 9-12 high school population of 3,500 students in 1972. The decline in population over the last 45+ years, as well as changes in educational programming, has seen the repurposing of many of the interior spaces. BHS has housed Kindergarten classrooms, and part of one academic wing currently serves as our integrated Pre-School. BHS operates many specialized programs to support the needs of our most challenged and vulnerable students within the school, and these programs occupy most of the first-floor spaces. BHS faculty and staff, with the support of parents and the community, provide exceptional academic and social-emotional supports to all students, and we are dedicated to finding ways to meet the needs of all our students, including those who may otherwise be in out-of-district placements. The result of this fundamental commitment, which is a price that we happily accept, is that the current population of approximately 1,745 students fills the remaining classroom spaces, and fully utilizes the common learning spaces. As would be expected after 48 years of use, many classrooms are no longer used for the types of courses for which they were designed. The STRIVES Program, a special education service, occupies a classroom space outfitted with equipment for teaching electronics from 1972. The equipment was too large to be removed, so as a result it still occupies the space and existing courses find ways to work around it. Former home economics spaces still retain the original cabinets, stoves, and sinks, but are now serving as art and health classrooms. Teachers have found ways to accommodate these impediments, and because they are skilled and talented professionals they effectively instruct classes that are filled with obsolete equipment and structures. Other classroom spaces have been redesigned over the years to better suit the needs of the programs they house, including the construction of walls to divide rooms originally designed for full classrooms to accommodate specialized programs and services.

In typical classrooms, the demand for power for devices has far exceeded the wiring installed in 1972. The limits of this infrastructure have created significant obstacles and barriers to implementation of technology and a 21st century learning environment. In most classrooms, there are only two outlets, which has most recently proven to be a substantial challenge to our efforts to implement our 1:1 technology initiative. Open-space classrooms with operating accordion walls were repurposed into standard classroom spaces; unfortunately, the replacement walls are not soundproof and ambient noise from adjacent classrooms in these areas are problematic for learning, especially for those students with learning challenges and environmental sensitivities.

Although BHS utilizes all available spaces for instruction and programs, the quality and comfort of those spaces for learning is often inadequate. Inconsistent heating and cooling, plumbing that has passed its useful life, routine

failure of originally installed equipment, and worn conditions resulting from 48 years of heavy use by students, staff and the community, all create teaching and learning hurdles for staff and students. While the building is structurally sound thanks to solid construction and investments made over the years in roofs, boilers, and other upgrades, significant challenges remain: original windows, combined with expansive core spaces such as the main foyers, cafeteria and media center are difficult to heat and cool during extreme temperatures; some bathrooms that are undersized and in need of renovation; locker rooms that are oversized and also in need of significant renovation, and the previously detailed classroom and learning space issues, that are original to the building. None of these facility challenges are surprising considering the age building of the building; however, while capital improvements have been done over the years, the funds now required to conduct the type of full scale renovations needed to both update existing, and in many cases original, systems and infrastructure, as well as to create spaces that promote 21st century teaching and learning, are beyond the capacity of year-to-year operational budgets and available local capital funds. This fact is, of course, the impetus for our submission for a Core Program with the MSBA.

MAINTENANCE and CAPITAL REPAIR: Please provide a detailed description of the district's current maintenance practices, its capital repair program, and the maintenance program in place at the facility that is the subject of this SOI. Please include specific examples of capital repair projects undertaken in the past, including any override or debt exclusion votes that were necessary (maximum of 5000 characters).

The district receives $1,000,000 in capital each year from the Mayor and Town Council to address highest priority needs. We also employ a full time electrician, plumber, painter, carpenter and two general laborers for work that can be addressed without outside contractors. Our operational budget for custodial and maintenance is almost $3,000,000 per year. All buildings, with the exception of our two middle schools, are currently being evaluated as part our SchoolDude Facilities Management System upgrade. The following work was done at the high school in the past few years:
Renovate 7 Bathrooms 2015
Replace gymnasium bleachers 2015
Refurbish gymnasium floor 2015
Repave front loop driveway and part of access road 2015
Replaced roof top air conditioning unit 2015
Solar PV on roof 2016
Replaced carpeting in media center offices 2016
Installed rolling steel door to loading dock 2016
Repave back loop driveway and part of access road 2016
Installed new kilns 2016
Built new pre-school bathroom 2016
Installed new walk-in freezer 2016
New ceiling and lights (1st floor near elevators and locker area) 2016
Replaced carpet in both main lobbies 2016
Replaced section of lockers 2017
2018-2019: 1) replaced 60% of our transformers; (2) provided HVAC system upgrades: (3) installed all new lighting; (4) provided new ceilings in all core areas, (5) implemented multiple water and other energy conservation measures; (6) Renovation of 2 public restrooms, (7) construction of 2 large public rest rooms to service the gymnasium and cafeteria, (8) repaving of back parking lot & installation of ADA compliant curbing and access, (9) Replacement of security gate, and (10) build-out of a cafe for a special educaton life skills program.

Priority 3

Question 1: Please provide a detailed description of the "facility-related" issues that are threatening accreditation. Please include in this description details related to the program or facility resources (i.e. Media Center/Library, Science Rooms/Labs, general classroom space, etc.) whose condition or state directly threatens the facility's accreditation status.

In October 2017, New England Association of Schools and Colleges (NEASC) visited Braintree High School for our decennial review. Over the course of four days, the visiting team did an extensive review of all aspects of Braintree High School including our facility. In their formal written review, the NEASC committee voted to place the school on warning status for the standard on "Community Resources for Learning." Many aspects of the school facility led to the committee putting BHS on warning status, and the report noted that only 34.5 percent of staff agree that the site and plant have a positive impact on programs and services. The committee referenced infrastructure deficiencies including the following:

- General classroom comfort: inconsistent operation of the heating, ventilation, and air-conditioning (HVAC) system (some mitigation realized with the ESCO project, but BHS remains on pneumatic controls and classroom univents & air exchangers are original to the building);

-Safety and functionality of science labs for 21st century learning;

- Undersized classroom & lab spaces;

- Classrooms on interior walls - no windows;

-Bathrooms that are undersized, particularly for the auditorium;

Priority 3

Question 2: Please describe the measures the district has taken to mitigate the problem(s) described above.

Both Braintree High School and the Braintree Public Schools have taken many steps to mitigate some of the problems detailed above, including: (1) replaced 60% of our transformers; (2) provided HVAC system upgrades: (3) installed all new lighting; (4) provided new ceilings in all core areas, (5) implemented multiple water and other energy conservation measures; (6) renovation of 2 public restrooms, and (7) construction of 2 large public rest rooms to service the gymnasium and cafeteria.

The superintendent, headmaster, and science director met with the Braintree Fire Department and addressed all safety concerns in science labs including repair of broken fume hoods, installation of new eye wash stations, and stocking fire blankets. The science director engaged a representative from the Laboratory Safety Institute to review the current facility and to provide suggestions on how to improve chemical and lab safety measures, and all chemicals have been inventoried through an online system. Unused and expired chemicals were professional removed from the building. These incremental steps have moved the school forward with respect to addressing the safety aspects of the NEASC report; however, they do not address the larger functionality questions presented. Steps to counter the deficiencies such as lab functionality would require a more complete renovation of the spaces and a much larger financial investment than is possible under the current operating budget.

Priority 3

Question 3: Please provide a detailed explanation of the impact of the problem described in this priority on your district's educational program. Please include specific examples of how the problem prevents the district from delivering the educational program it is required to deliver and how students and/or teachers are directly affected by the problem(s) identified.

While the NEASC committee highlighted significant strengths in the area of curriculum, instruction, assessment, and school culture, they explicitly stated how many of the problems described above have a negative impact upon delivery of a quality educational program. These noted difficulties are also observed by staff and students on an ongoing basis, which was documented in the NEASC report. Below is a summary listing of deficiencies:

During heavy, wind-driven rainstorms, leaks typically occur at various locations throughout the building. This water infiltration generally occurs through rooftop unit penthouse structures. In these conditions, leaks develop in classrooms, and school administrators relocate students and teachers in the middle of the school day, which interrupts learning and disrupts the general organization of the school. Large windows in art classrooms experience similar issues.

The aged HVAC control system, and original room univents, provide inconsistent heating and cooling, resulting in inconsistent temperatures, which impacts the learning environment. Classroom univents are in frequent need of repair. During the colder months, delays in getting contractors in to repair univents result in those classrooms being moved.

The NEASC committee pointed out that the science labs are not suitable to deliver a 21st century learning experience for students because the rooms are undersized, sinks are in disrepair or undersized, and vent hoods function inconsistently. The fixtures in these spaces generally original to the building and beyond their useful life. The insufficient spaces challenge our ability to provide meaningful lab experiences to students and are often replaced with demonstration labs rather than student-participatory experiments. The structure of the spaces reflects the educational pedagogy of the 1970's and are in need of reconfiguration to best deliver 21st century science instruction to students.

Finally, the current electrical infrastructure within the building significantly impacts teaching and learning. The average classroom does not have the circuitry required to support common uses of electrical devices. As a result, we are limited in the deployment of devices in most of our classrooms due to insufficient wiring.

Please also provide the following:

Name of accrediting entity (maximum of 100 characters):
New England Association of Schools and Colleges (NEASC)

Current Accreditation Status: Please provide appropriate number as 1=Passed, 2=Probation, 3=Warning, 4=Lost: 3

If "WARNING", indicate the date accreditation may be switched to Probation or lost:

If "PROBATION", indicate the date accreditation may be lost:

Please provide the date of the first accreditation visit that resulted in your current accreditation status.:

Please provide the date of the follow-up accreditation visit:

Are facility-related issues related to Media Center/Library? If yes, please describe in detail in Question 1 below.:
NO

Are facility-related issues related to Science Rooms/Labs? If yes, please describe in detail in Question 1 below.:
YES

Are facility-related issues related to general classroom spaces? If yes, please describe in detail in Question 1 below.: YES

Are facility-related issues related to SPED? If yes, please describe in detail in Question 1 below.: NO

Are facility-related issues related to support spaces? If yes, please describe in detail in Question 1 below.:
NO

Are facility-related issues related to "Other"? If yes, please identify the other area below and describe in detail in Question 1 below.: YES

Please describe (maximum of 100 characters).:

NEASC: Building does not support high-quality programs & services.

HVAC, electrical & plumbing

Priority 5

Question 1: Please provide a detailed description of the issues surrounding the school facility systems (e.g., roof, windows, boilers, HVAC system, and/or electrical service and distribution system) that you are indicating require repair or replacement. Please describe all deficiencies to all systems in sufficient detail to explain the problem.

The HVAC control system at BHS is aged and in various states of disrepair. The controls for two of the five boilers in the basement of BHS required emergency repair recently to be brought back online during an historic cold snap. There are various and frequent problems with the HVAC system as a whole. Classroom univents make loud noises, need frequent repair, and often create inconsistent temperatures within classrooms.

Plumbing issues are a regular occurrence in bathrooms, art classrooms, and science labs. The school district employs a plumber, who spends a preponderance of time working at the high school on issues related to clogs, broken fixtures, broken drain pipes, leaking pipes, and faulty shut-off valves. Sinks in both science and art spaces are often in need of repair and therefore unreliable for instruction. The sinks themselves are undersized are inappropriate for the current applications for which they could be used. Bathroom sink and toilet plumbing issues are a frequent occurrence and lead to bathrooms being shut down while work to repair the damage is conducted.

Windows are original to the building and require regular maintenance attention. In several art classrooms, large windows experience water infiltration in wind-driven rain storms. Large spaces, including the media center, cafeteria and gymnasium are impacted when outdoor temperatures are extreme due to their low insulation value.

Bathrooms at Braintree High School are original, with repairs and limited upgrades being done over time. The bathrooms that service the auditorium, cafeteria and gymnasium are undersized by today’s standards, and heavy use during events creates demands on custodial workers. Due in part to the age of the bathrooms, the appearance of cleanliness is impacted. Non-uniform/patchwork repairs over the years have resulted in a mismatch of tile, fixtures, and partitions in many bathrooms. In addition, toilets and sinks are sometimes taken offline for use for repair.

Priority 5

Question 2: Please describe the measures the district has already taken to mitigate the problem/issues described in Question 1 above.

The town recently implemented an ESCO project to address the building and district's needs in the area of energy conservation. Specifically, at BHS, the project has improved HVAC through new controls and an energy management system, and lighting issues financed through the cost savings such improvements will provide to the district in efficiencies. Lighting was replaced with LED fixtures, which provide cost savings to the district and updated HVAC controls improve the effectiveness in energy usage. All bathroom china was replaced, and new ceiling tiles have been installed throughout the building.

Over the years, the steps taken to mitigate problems identified have been repair activities by our school custodians or district maintenance staff, with some contracted work. The head custodian has done ample work adjusting, by hand, temperature controls on rooftop units to ameliorate heating and cooling issues. Custodians are called on a routine basis to attempt to repair loud or broken classroom univents.

Plumbing issues are addressed by our district's plumber who prioritizes and addresses concerns upon notification of a leak or blockage. The work volume is such that many issues take an inordinate amount of time to be resolved, as the aged nature of the system requires locating older parts and/or improvising solutions given the inability to find necessary materials. The interim headmaster's proposed FY18 budget to the superintendent included the request for a renovation of the gymnasium bathrooms, which were prioritized in that year's capital budget.

Priority 5

Question 3: Please provide a detailed explanation of the impact of the problem/issues described in Question 1 above on your district's educational program. Please include specific examples of how the problem prevents the district from delivering the educational program it is required to deliver and how students and/or teachers are directly affected by the problem identified.

As described in other sections of this document, the heating and cooling problems caused by an inconsistent HVAC system have created uncomfortable classrooms, where students and teachers can be distracted from learning. When weather conditions are extreme, classrooms are sometimes moved to other parts of the building during the day, which disrupts the schedule, limits the resources available to teachers, and is distracting to students. While the ESCO project has helped to mitigate this issue some, the HVAC system still utilized pneumatic controls, and the air exchange system is original to the building.

The functionality and usability of sinks in both science and art classrooms prevent and discourage students and teachers from being able to use them in a way to effectively support curriculum projects. Lessons become limited to those that do not include the use of these resources and certain labs/projects are removed from the curriculum. Aged univents frequently make loud rattling sounds, which impacts learning. The service being provided to keep these units operational often occurs during class time, which can be an additional distraction to the teachers and students in the room.

Priority 5

Question 4: Please describe how addressing the school facility systems you identified in Question 1 above will extend the useful life of the facility that is the subject of this SOI and how it will improve your district's educational program.

Addressing the facility problems will help to extend the useful life of our building. An efficiently functioning HVAC system would provide a more comfortable atmosphere in which students could engage their education. Properly operating univents would cause fewer distractions, and would help students and teachers focus on learning rather than their environment or comfort. Proper heating and cooling would also provide a better environment for all people working within the building and would greatly improve morale for all stakeholders.

Renovating and upgrading sinks in classroom spaces will allow for full implementation of curriculum that requires these resources, specifically while conducting science labs and working on art projects. Renovating bathrooms will truly extend the useful life of the facility, as these spaces would then be appropriate for various night, weekend, and community events. Functional toilets, sinks, and plumbing will ensure a more comfortable environment and will allow for full access to all bathrooms to appropriately serve a building housing 2,000 individuals. In addition, upgraded and functional bathrooms will convey to the community a sense of pride in the school.

Please also provide the following:

Have the systems identified above been examined by an engineer or other trained building professional?:
YES

If "YES", please provide the name of the individual and his/her professional affiliation (maximum of 250 characters):
NORESCO conducted an investment grade audit of energy related systems, including HVAC and lighting systems.

The date of the inspection:

A summary of the findings (maximum of 5000 characters):
Existing fluorescent lighting needs to be replaced with LED and install lighting controls; heating controls need replacement; installation of energy management system recommended; installation of energy efficient transformers recommended.

Priority 7

Question 1: Please provide a detailed description of the programs not currently available due to facility constraints, the state or local requirement for such programs, and the facility limitations precluding the programs from being offered.

We currently have a number of facility constraints which result in not being able to offer important aspects of a varied and rich curriculum.

Art: District initiatives look to increase STEAM (Science Technology Engineering Art Math) opportunities for students in line with Massachusetts Visual Arts Curriculum
Frameworks. However, due to the facility we cannot implement such programs as the following:

o There is no open studio for students' photography work
o Studio based STEAM courses such as Industrial Design, Architecture, and Structures-- which are a component of the newly revised Massachusetts Design and Visual Communications Frameworks--cannot be offered due to lack of a workshop area with large tables, areas for electricity, and building space
o Limited access to functional in-class resources including sinks and cleaning areas for materials reduces curriculum-based projects
o Our Fine Arts courses cannot teach large scale paintings and projects because of a lack of dedicated wall space for the process of art making

Technology: District initiatives look to increase STEAM opportunities for students in line with Massachusetts Technical Education Curriculum Frameworks. However, due to the facility we are challenged to fully implement such programs as the following:

o Lack of appropriate and dedicated technology spaces prevents the school from meeting certain high-tech expectations within the Digital Learning Computer Standards Frameworks
o Suggested high tech programs such as CAD, Robotics, Industrial Design, Coding, Computer Programming, and 3D printing are not offered due to lack of electrical infrastructure and appropriate studio spaces
o Limited media production space and equipment which hinders expansion of successful pilot program
o Limited electrical outlets in all classrooms pose an impediment to increasing device use

Science: Massachusetts Science and Technology/Engineering Curriculum Frameworks indicate specific needs for the physical space and types of resources required for lab work:

o Complex labs from these curriculum frameworks should be added to biology and chemistry curriculum, but they currently cannot be due to existing lab issues;
o An engineering program aligned with Technology/Engineering Standards within the curriculum frameworks has not been implemented as there is no large open space classroom and electrical infrastructure to teach this course, or to store and operate equipment;
o Laboratory-based science classes for students in specialized programs are not offered consistently because of a lack of lab space. As a result, these students take their science class in a general education classroom, which is not educationally ideal for many within this population. In addition, a mainstream chemistry class is currently taking place in a Physics classroom, which does not have the proper equipment needed for a chemistry course, due to a lack of appropriately outfitted lab rooms

Physical Education: A component of one of the four goals in the Braintree Public Schools' five year strategic plan is to improve student success in the area of physical wellness. The district's objective to meet the physical aspect of the wellness goal states that we will "develop a plan that seeks to provide opportunities for students to be physically active throughout the school day." In order to fully support that objective, we would look to add the following:

o Offerings in such areas as spinning, aerobics, dance, aquatics, project adventure (low and high elements), which are

topics we cannot address because of our current
facility. Expansion of current Physical Education offerings to include elements from the Physical Activity and Fitness standard of the Massachusetts Comprehensive Health Curriculum Frameworks is, therefore, hindered
o More drinking water fountains throughout our current gymnasium, gymnastics, and fitness room facilities would benefit the health and well-being of students taking classes in these areas.

Priority 7

Question 2: Please describe the measures the district has taken or is planning to take in the immediate future to mitigate the problem(s) described above.

The capital costs of the some of the challenges described above, including space reconfiguration and renovation, are beyond the capacity of existing funding; however, ongoing investments are made through capital funds made available by the Mayor. Over the last several years, this has been primarily in the area of technology, where steps have been taken to enhance teaching and learning and the curriculum opportunities offered. The district was recently awarded a Digital Connections Grant which allowed for all schools in the district to create a robust wireless infrastructure. This has led to a Bring Your Own Device initiative, currently in the first year of a four-year phased process. In addition, technology equipment has been added through capital funding, resulting in an increase to the number of Chromebooks, the addition of a Mac computer lab used in music and world language classes, and, through a partnership with Braintree Cable Access Television (BCAM), equipment for students to use in Media Production classes. Our special education department has re-purposed a storage room to offer basic electronics classes to distinct populations.

Priority 7

Question 3: Please provide a detailed explanation of the impact of the problem described in this priority on your district's educational program. Please include specific examples of how the problem prevents the district from delivering the educational program it is required to deliver and how students and/or teachers are directly affected by the problem identified.

Many of the issues addressed in Question 1 demonstrate the fact that Braintree High School is regularly challenged to offer all components of 21st century educational programming. While existing programming in each of the areas mentioned are of high quality and delivered by talented faculty, there is more that should be offered to better enhance the education of our students. Essentially, the academic program should be expanded to include the following:

Art
o An open-studio photography program where students can display their work
o Studio courses such as Industrial Design, Architecture, and Structures
o A deeper curriculum in our Fine Arts courses driven by creative spaces and adequate resources

Technology
o High tech programs such as CAD, Coding, Computer Programming, and 3D printing
o Electrical infrastructure that supports the expansion of 21st Century devices and learning tools

Science
o Appropriately designed and outfitted science lab space in locations that allow for the sharing of materials and resources
o Complex labs in biology and chemistry
o A 21st century engineering program that is supported by the proper classroom spaces and equipment required
o Students in specialized programs taking full laboratory-based science classes in spaces designed to meet their unique needs

Physical Education
o Offerings in such areas as spinning, aerobics, dance, aquatics, project adventure (low and high elements) provided to our students

Career Vocational Technical Education
The absence of suitable or purposely-designed spaces has made it impossible to impossible to begin or expand CVTE offerings, which are necessary to students' full educational development.

Without the well-designed and spaces to deliver specialized curriculum and programming, the school is challenged to offer these opportunities to students. Many of the problems delineated requires a substantive change to the organization, outfitting, purposing, and configuration of classroom spaces at Braintree High School. The edifice that represented state-of-the-art educational thinking in 1972, is now strained to meet the learning needs of students preparing to enter a global economy.

Vote

REQUIRED FORM OF VOTE TO SUBMIT AN SOI

REQUIRED VOTES

If the SOI is being submitted by a City or Town, a vote in the following form is required from both the City Council/Board of Aldermen **OR** the Board of Selectmen/equivalent governing body **AND** the School Committee.

If the SOI is being submitted by a regional school district, a vote in the following form is required from the Regional School Committee only. FORM OF VOTE Please use the text below to prepare your City's, Town's or District's required vote(s).

FORM OF VOTE

Please use the text below to prepare your City's, Town's or District's required vote(s).

Resolved: Having convened in an open meeting on _____, prior to the closing date, the _____*[City Council/Board of Aldermen, Board of Selectmen/Equivalent Governing Body/School Committee]* of _____*[City/Town]*, in accordance with its charter, by-laws, and ordinances, has voted to authorize the Superintendent to submit to the Massachusetts School Building Authority the Statement of Interest dated _____ for the _____*[Name of School]* located at _____*[Address]* which describes and explains the following deficiencies and the priority category(s) for which an application may be submitted to the Massachusetts School Building Authority in the future

_____

_____

_____

_____

_____

_____; *[Insert a description of the priority(s) checked off on the Statement of Interest Form and a brief description of the deficiency described therein for each priority];* and hereby further specifically acknowledges that by submitting this Statement of Interest Form, the Massachusetts School Building Authority in no way guarantees the acceptance or the approval of an application, the awarding of a grant or any other funding commitment from the Massachusetts School Building Authority, or commits the City/Town/Regional School District to filing an application for funding with the Massachusetts School Building Authority.

CERTIFICATIONS

The undersigned hereby certifies that, to the best of his/her knowledge, information and belief, the statements and information contained in this statement of Interest and attached hereto are true and accurate and that this Statement of Interest has been prepared under the direction of the district school committee and the undersigned is duly authorized to submit this Statement of Interest to the Massachusetts School Building Authority. The undersigned also hereby acknowledges and agrees to provide the Massachusetts School Building Authority, upon request by the Authority, any additional information relating to this Statement of Interest that may be required by the Authority.

Chief Executive Officer *	**School Committee Chair**	**Superintendent of Schools**
(signature)	(signature)	(signature)
Date	Date	Date

* Local chief executive officer: In a city or town with a manager form of government, the manager of the municipality; in other cities, the mayor; and in other towns, the board of selectmen unless, in a city or town, some other municipal office is designated to the chief executive office under the provisions of a local charter. Please note, in districts where the Superintendent is also the Local Chief Executive Officer, it is required for the same person to sign the Statement of Interest Certifications twice.